Steel-Framed Quick-Assembly Modular Housing

Construction Details Reference Atlas

Drawings and design provided by Wenzhonggu Container

Client
Project
Drawing title
Drawing number
Designed
Checked
Reviewed
Process
Standardization
Approved
Scale / Quantity

Contents

Contents	1
General Notes	2-5
Module Specifications	6
Project Drawings for Quick-Assembly Modules	7
Exploded View of Module	8
Standard Module Breakdown	9
Standard Module Foundation Corner Fittings	10
Detailed Plan (1)	11
Roof Frame Layout	12
Base Frame Layout	13
Wall Construction Notes (1)	14
Wall Construction Notes (2)	15
Section View	16
Side Elevation	17
Front and Rear Elevations	18
Cross-Section Details	19
Detailed Plan (2)	20
Welding Details for Embedded Parts	21
Wall Construction Details	22-29
Project Examples	30-35

QUICK-ASSEMBLY MODULAR HOUSING		REFERENCE ATLAS
Design / Check	Contents	Project:
Review / Approval		Design stage: Scheme
Date / Scale		Sheet 1 of 35

2 :

General Notes

1 Overview

1.1 This atlas illustrates the use of steel-framed quick-assembly modular buildings in construction.

1.2 These buildings combine a steel structural frame with enclosure panels. All module components are standardized in design and factory-made, then rapidly assembled on site using standardized connectors. Their design and construction follow the principles of interchangeability, modularity, industrial production and optimized integration.

1.3 Each functional building unit forms a module, and modules are combined to create a building. A unit mainly comprises a roof, base, columns, walls, doors, windows and fittings. These principal components are assembled on site. Accurate component manufacture enables fast, precise installation.

1.4 All components are standardized and supplied in flat packs for convenient transport and reduced storage space.

1.5 The modules are reusable and can be dismantled and reassembled as required, conserving energy and resources.

1.6 The system allows flexible space planning. Modules can be connected horizontally and vertically, stacked, and fitted with rooftop platforms. Interior partitions and dividing walls can be arranged flexibly within connected modules.

2 Scope

2.1 The products in this atlas are intended for the design and selection of steel-framed quick-assembly modular buildings up to three storeys high.

2.2 They are suitable for temporary or relocatable buildings, including hotels, camps, tourist facilities, military camps, site offices, guard booths, villas and shops.

3 Module Types and Components

3.1 The basic product is a single module. Functional modules, including stairwells, toilets and showers, are also available to meet essential building needs. Different module connections and combinations provide a variety of spatial configurations.

3.2 Standard basic module dimensions are listed in Table 1.

Table 1 Basic Module Dimensions

External dimension	Standard module
Length	5950 mm
Width	3000 mm
Height	2800 mm

3 :

General Notes

4 Design Considerations

4.1 Provide appropriate functions and an efficient spatial layout.

4.2 Meet requirements for daylight, lighting, ventilation, acoustic insulation, thermal insulation, heat protection, waterproofing and hygiene.

4.3 Meet fire safety, evacuation, protection and other operational safety requirements.

4.4 Meet energy-saving and environmental protection requirements.

4.5 Achieve an aesthetically appropriate relationship with the surroundings.

4.6 Structural design may use the manufacturer's load-capacity data for single modules and inter-module connections. As modules are shipped as separate components, particular attention must be paid to checking forces in columns, roof/base frame connectors and fastened joints.

4.7 Coordinate architectural and structural design. Wall openings, cantilevered arrangements and multi-storey stacking must satisfy structural safety requirements. Site-assembled modules have lower overall rigidity than finished units; reinforce door/window openings and module joints.

4.8 Equipment and services may be suspended from or secured to the steel frame and column channels. Wall panels and roof/base frames are separate components. Prefer factory-installed plumbing and electrical services within panel modules, connected together on site to reduce site drilling.

4.9 External services and services crossing module joints must have durability consistent with the project design life. Provide waterproofing, corrosion protection and impact protection at joints.

4.10 Plans, spatial arrangements and panel joints must allow space for installing and maintaining services. Panel joints must not interrupt service routes.

4.11 Factory-form accurately positioned openings for plumbing and electrical risers through roof panels, floor panels and joints, allowing for assembly tolerances. Penetration seals must meet fire, waterproofing and acoustic requirements.

4.12 Use the complete assembled steel frame for main equipotential bonding. Connect each module to the external power supply through a dedicated industrial socket rated for its electrical load.

4.13 Use a common earthing system for functional earthing, repeated PEN earthing, lightning protection and low-current systems. Use the steel frame and embedded foundation reinforcement as interconnected natural earth electrodes, with an earthing resistance of no more than 1 ohm. Precision low-current equipment may have an additional independent artificial earth electrode.

4.14 Apply energy-saving and low-carbon principles throughout factory fabrication, dismantling and packing, transport, site assembly and later alterations. Prioritize insulated sandwich wall panels, energy-efficient doors and windows, photovoltaic systems and water-saving sanitary fittings. Integrate material-, energy- and water-saving technologies into the building design.

4.15 As modules are transported in components and assembled on site, carry out specific structural checks for packed transport, lifting and erection, single- and multi-storey stacking, and connections between modules. Provide deformation restraints at wall panel, roof/base frame and corner fitting joints to control joint movement and module deflection.

5 Other Notes

5.1 All dimensions are in millimetres (mm), unless otherwise indicated.

5.2 This atlas is based on component kits, assembly methods and connection details supplied by modular building manufacturers. The relevant manufacturer is responsible for technical interpretation and questions concerning product compatibility.

QUICK-ASSEMBLY MODULAR HOUSING		REFERENCE ATLAS
Design / Check	Design Notes	Project:
Review / Approval		Design stage: Scheme
Date / Scale		Sheet 3 of 35

4

General Notes

Table 2 External Wall Construction and Thermal Performance

Wall ID	Wall Type	Basic Construction	Performance Parameters	Material / Thickness (mm)	Total Wall Thickness (mm)	Thermal Resistance R [(m2 K)/W]	Thermal Transmittance K [W/(m2 K)]
Q1	Metal-faced insulated sandwich-panel external wall	Colour-coated steel sheet + insulation core + colour-coated steel sheet	1. Inner and outer steel facings: 0.35-0.5 mm. 2. Glass wool core density: 64 kg/m3; fire classification A. Rock wool core density: 120 kg/m3; fire classification A; sound absorption coefficient: 0.73. Standardized individual panels have tongue-and-groove edges and are sealed on site using bolts and cover strips.	Glass wool 75 Glass wool 100 Rock wool 75 Rock wool 100	75 100 75 100	1.54 2.02 1.67 2.55	0.59 0.46 0.55 0.37
Q2	Composite lightweight-panel external wall	Outer lightweight panel + 30 mm glass wool insulation + inner lightweight panel	1. Individual panels: 50/75 mm; mass per area no more than 80 kg/m2; sound absorption coefficient: 0.2; fire classification A. 2. Central glass wool: 30 mm; density: 64 kg/m3. Panels are factory-made and joined vertically on site. Apply joint sealant and waterproof cover strips.	50+30+50 50+30+75 75+30+75	130 155 180	1.80 2.11 2.42	0.51 0.44 0.39

Additional Notes for Quick-Assembly Modules

1. Both wall types are factory-prefabricated as separate panels, flat-packed for transport, and assembled on site with roof/base frames and columns.
2. Fit vertical and horizontal panel joints with waterproof sealing strips and weather-resistant sealant to ensure overall watertightness.
3. For multi-storey modules, 100 mm rock wool sandwich panels are preferred for external walls to improve thermal insulation and fire performance.

Table 3 Door and Window Options

Item	Type	Description for Quick-Assembly Modules
Door	Steel door	Standard steel door leaf; single or double leaf available. The frame and wall panel have matching installation grooves for direct fixing on site.
Door	Thermally broken aluminium door	60-series thermally broken frame with 5+12A+5 insulating glass. Seal with door/window cover strips designed for the module system.
Door	Steel-reinforced uPVC door	60-series steel-reinforced uPVC frame with 5+9A+5 insulating glass; compatible with openings in standard 75/100 mm sandwich wall panels.
Door	Aluminium-magnesium alloy door	Tempered-glass or metal-panel options. Lightweight construction suits dismantled transport.
Door	Timber door	Solid timber or engineered timber door panel with a metal subframe, pre-fitted to suit the wall panel opening.
Window	Steel-reinforced uPVC window	60-series steel-reinforced uPVC frame with 5+9A+5 insulating glass. Insect screen and security bars are standard. Wall openings are factory-formed.
Window	Thermally broken aluminium window	60-series thermally broken frame with 5+12A+5 insulating glass. Optional insect screen and security bars; waterproof seals at assembly joints.

6

Modular Unit Specification Schedule

No.	Name	Configuration	Dimensions (L x W x H)	Schematic (indicative)	Suggested Uses
1	Standard single module	Basic standard module	5950×3000×2800	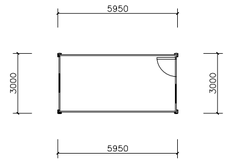	For dormitories or small offices. Wall panels, doors and windows can be configured as required.
2	Two-module assembly	2 standard modules joined side by side	5950×6000×2800	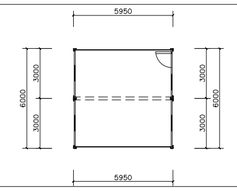	Expanded space for individual offices, small meeting rooms or simple small dining areas.
3	Three-module assembly	3 standard modules joined side by side	9000×5950×2800	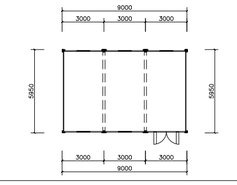	Wide, open space for large offices, meeting rooms or staff dining halls.
4	Four-module cross assembly	4 standard modules joined in a cross arrangement	11900×6000×2800	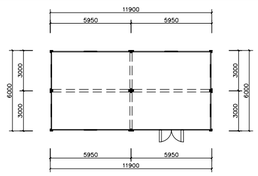	Large open-plan space for dining halls, communal lounges or lobby waiting areas.
5	Toilet module	Purpose-built module with integrated sanitary fixtures	5950×3000×2800	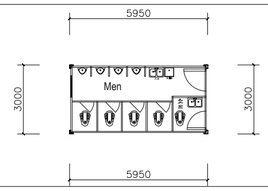	Complete public washroom fixtures for shared washing and toilet facilities on sites or campuses.
6	Shower module	Module with integrated shower fixtures	5950×3000×2800	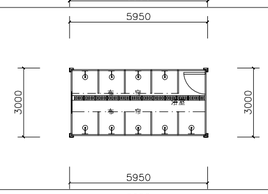	Shower partitions and drainage fixtures for site dormitories and shared campus shower facilities.
7	Stairwell module	Module fitted with prefabricated steel stairs	5950×3000×2800	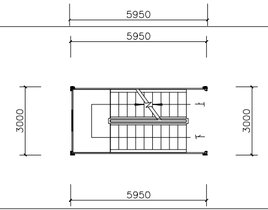	Indoor stair module for stacked modular buildings, providing access in two- or three-storey arrangements.

QUICK-ASSEMBLY MODULAR HOUSING		REFERENCE ATLAS
Design / Check	Module Specifications	Project:
Review / Approval		Design stage: Scheme
Date / Scale		Sheet 6 of 35

Modular Building Accessory Schedule

Component	Material	Type	Dimensions (mm)	Schematic	Notes
Outdoor stairs	Steel tube / C-section frame; chequer-plate or cement-board treads and landings	Single flight	5100×1100×2900	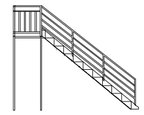	External access stairs for two-storey stacked modular buildings
		Two flights	4600×2600×2980	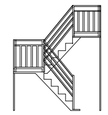	External stairs for two-storey modular buildings
		Extended two-flight	4800×2700×5880	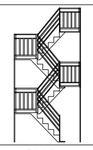	External stairs for three-storey modular buildings
Outdoor walkway	Steel tube / C-section frame; chequer-plate decking	Standard walkway	3000×1000×84	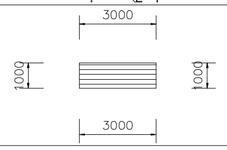	External connecting walkway for two- and three-storey stacked modules
Guardrail	Metal bar or glass-panel guardrails	Standard	3000×1200	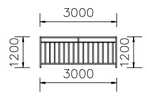	Guardrails for outdoor terraces and walkways
		Glass	3000×1200	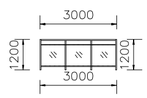	Guardrails for outdoor terraces and walkways
Canopy	C-section steel frame; metal-faced insulated sandwich roof panel	Standard canopy	3000×1200	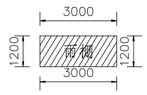	Rain and sun protection above entrances and corridors
Outdoor terrace	Steel subframe with outdoor WPC decking and complete guardrails	Leisure terrace	5950×3000	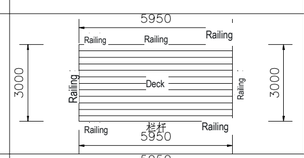	Outdoor leisure deck extension
Roof	Light-gauge steel framing, timber roof structure, etc.	Custom-built	Per project design	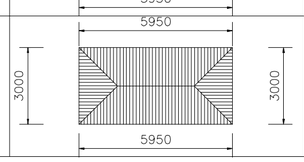	Roof profile and waterproof roof enclosure for modular buildings

QUICK-ASSEMBLY MODULAR HOUSING		REFERENCE ATLAS
Design / Check	Accessory Components	Project:
Review / Approval		Design stage: Scheme
Date / Scale		Sheet 7 of 35

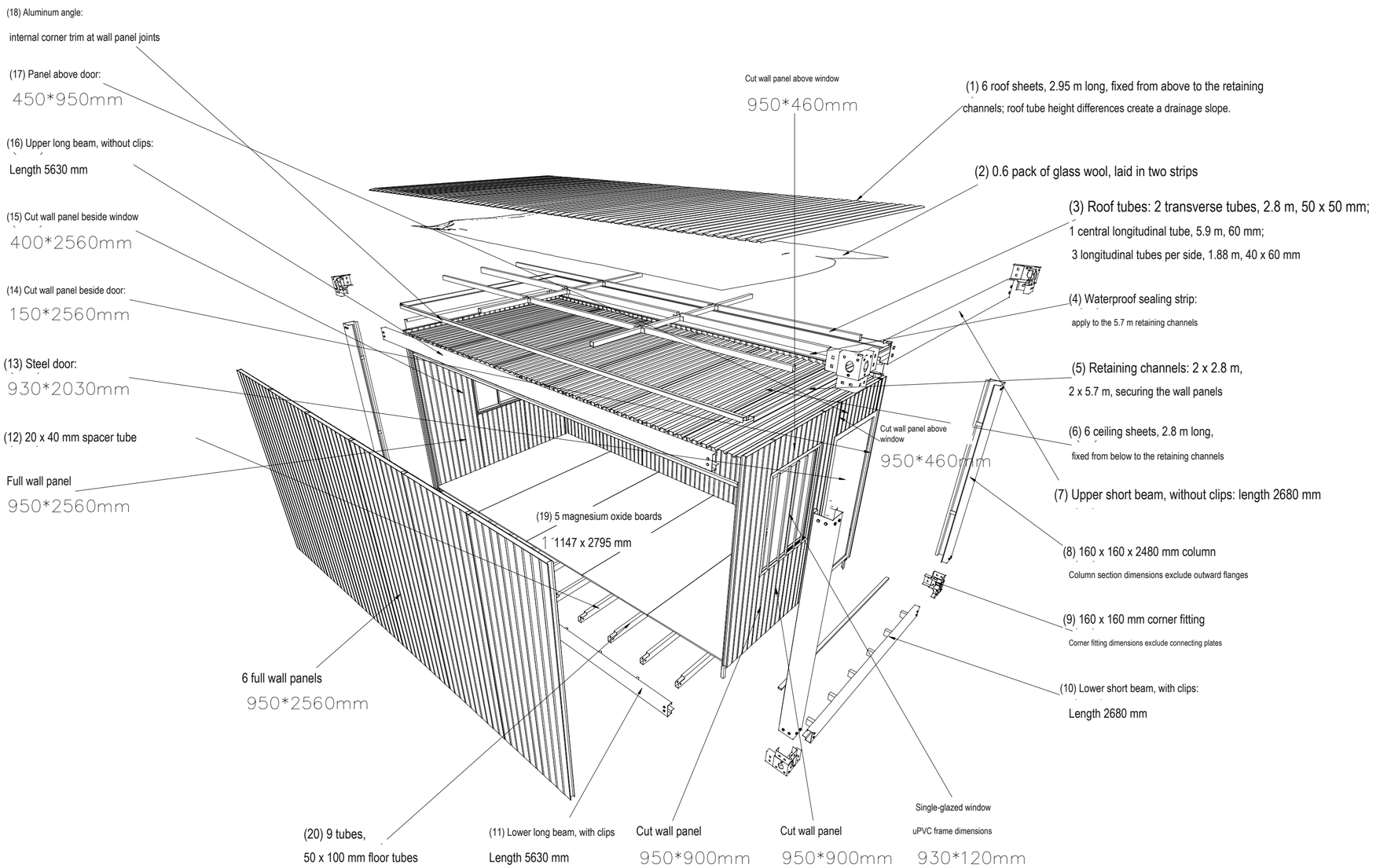

QUICK-ASSEMBLY MODULAR HOUSING		REFERENCE ATLAS
Design / Check	Module Exploded View	Project:
Review / Approval		Design stage: Scheme
Date / Scale		Sheet 8 of 35

9

Standard Modular Unit: Component Breakdown

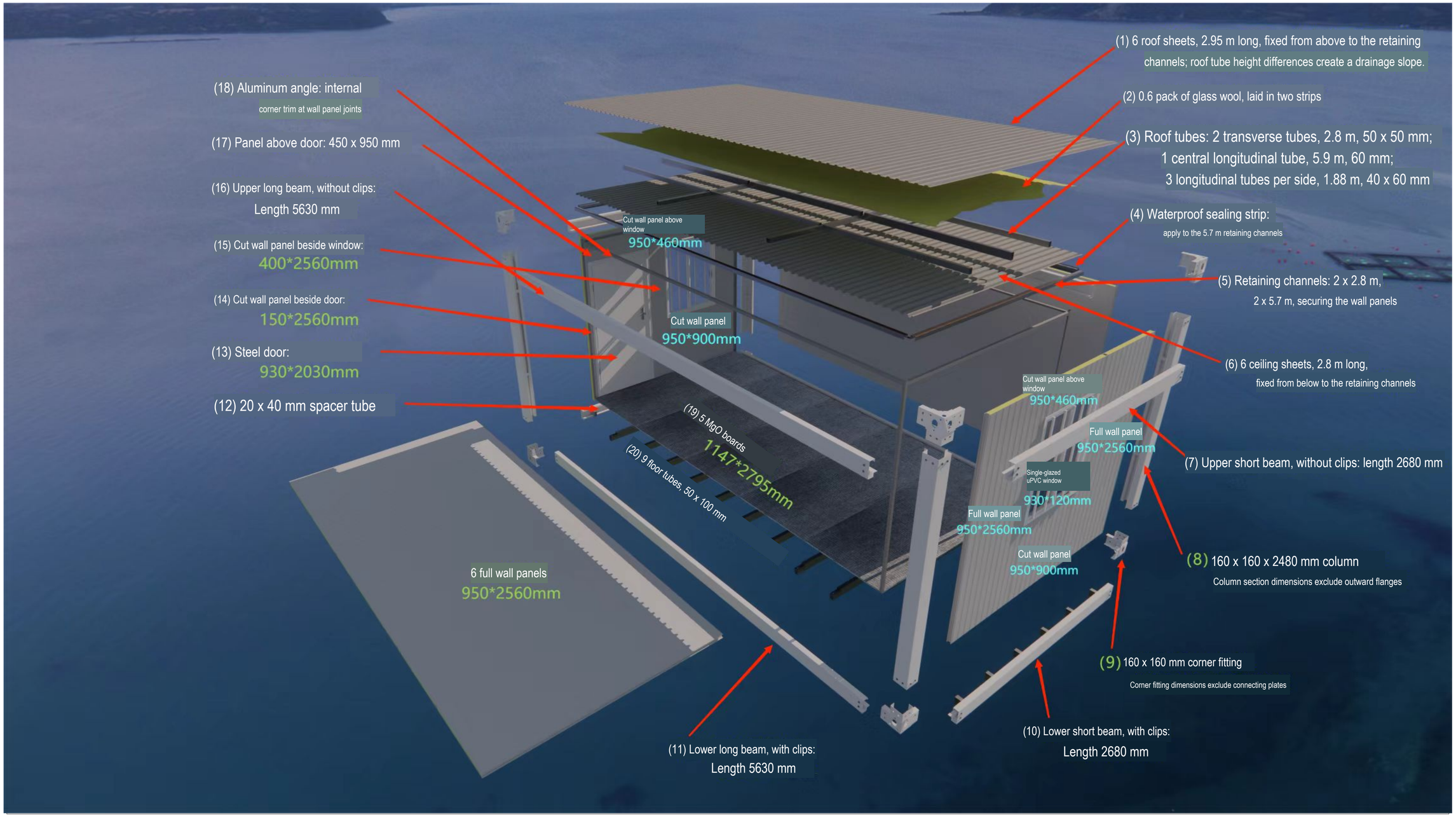

QUICK-ASSEMBLY MODULAR HOUSING		REFERENCE ATLAS
Design / Check	Standard Module Assembly	Project:
Review / Approval		Design stage: Scheme
Date / Scale		Sheet 9 of 35

10 :

Standard Modular Unit: Corner Fitting Details

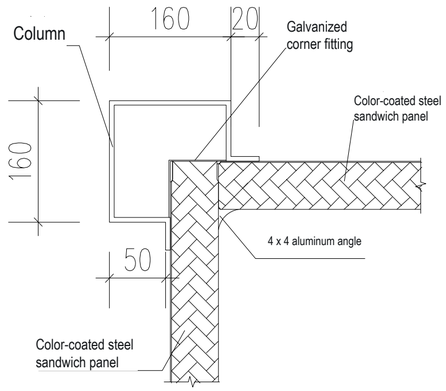

Column Connection Detail

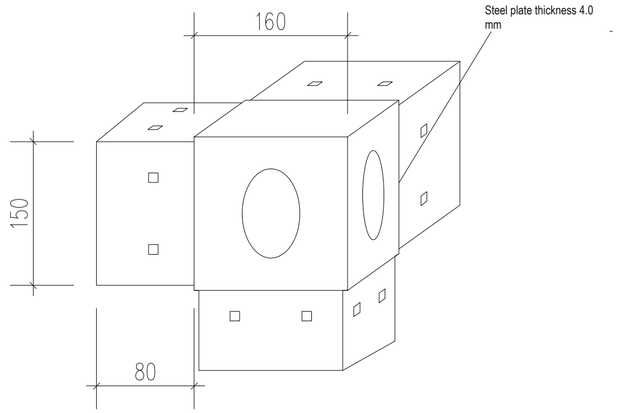

Corner Fitting Detail

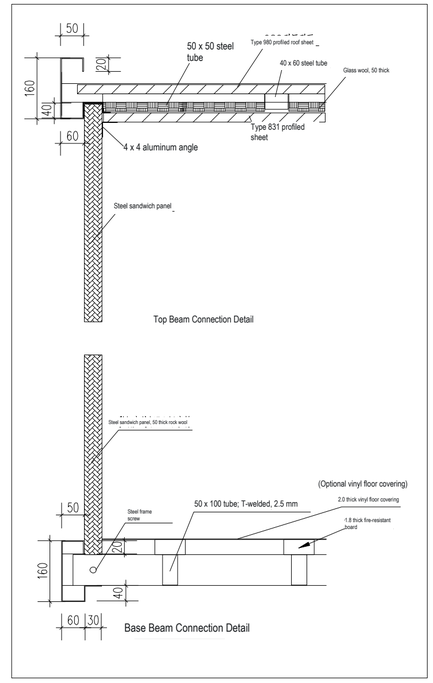

Bent steel angle welded inside, t = 4 mm

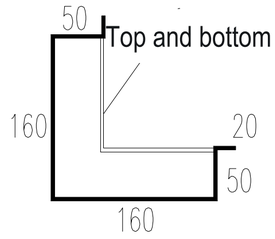

Column Section, t = 2.3 mm

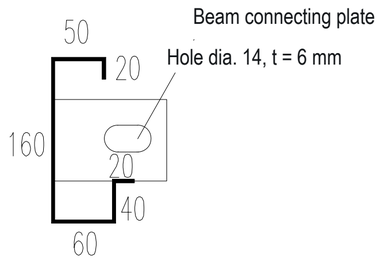

Base Beam Section, t = 2.3 mm

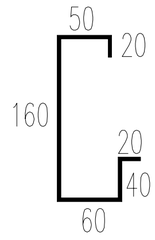

Top Beam Section, t = 2.3 mm

(Six drainage holes below)

QUICK-ASSEMBLY MODULAR HOUSING		REFERENCE ATLAS
Design / Check	Corner Fittings and Sections	Project:
Review / Approval		Design stage: Scheme
Date / Scale		Sheet 10 of 35

11 :

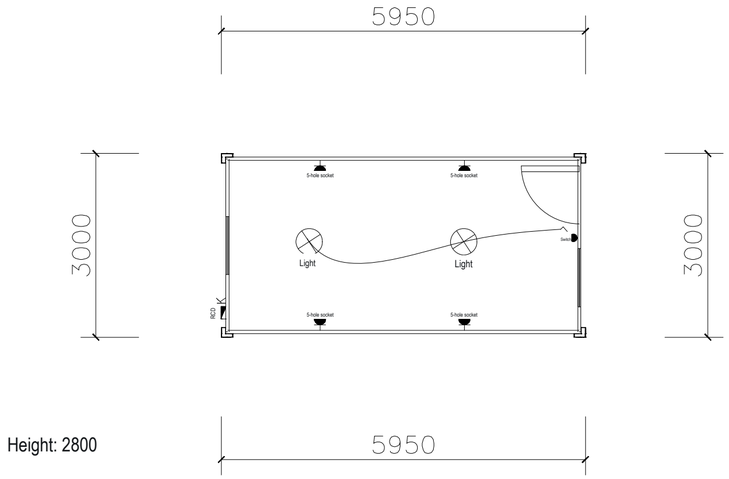

Height: 2800

Floor Plan 1:100

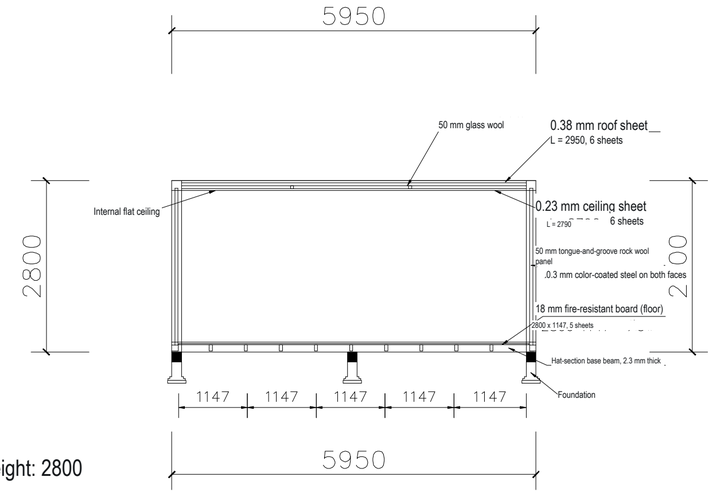

Height: 2800

Section 1:100

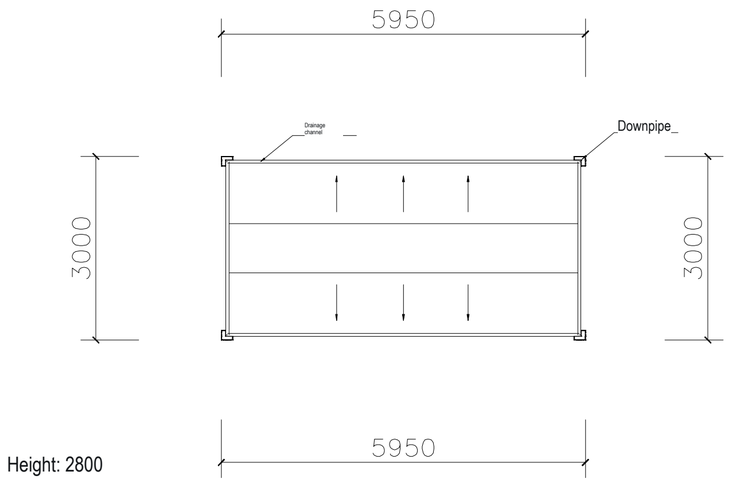

Height: 2800

Roof Drainage Plan 1:100

Modular Unit Details (1)

QUICK-ASSEMBLY MODULAR HOUSING		REFERENCE ATLAS
Design / Check	Plans and Details (1)	Project:
Review / Approval		Design stage: Scheme
Date / Scale		Sheet 11 of 35

12 :

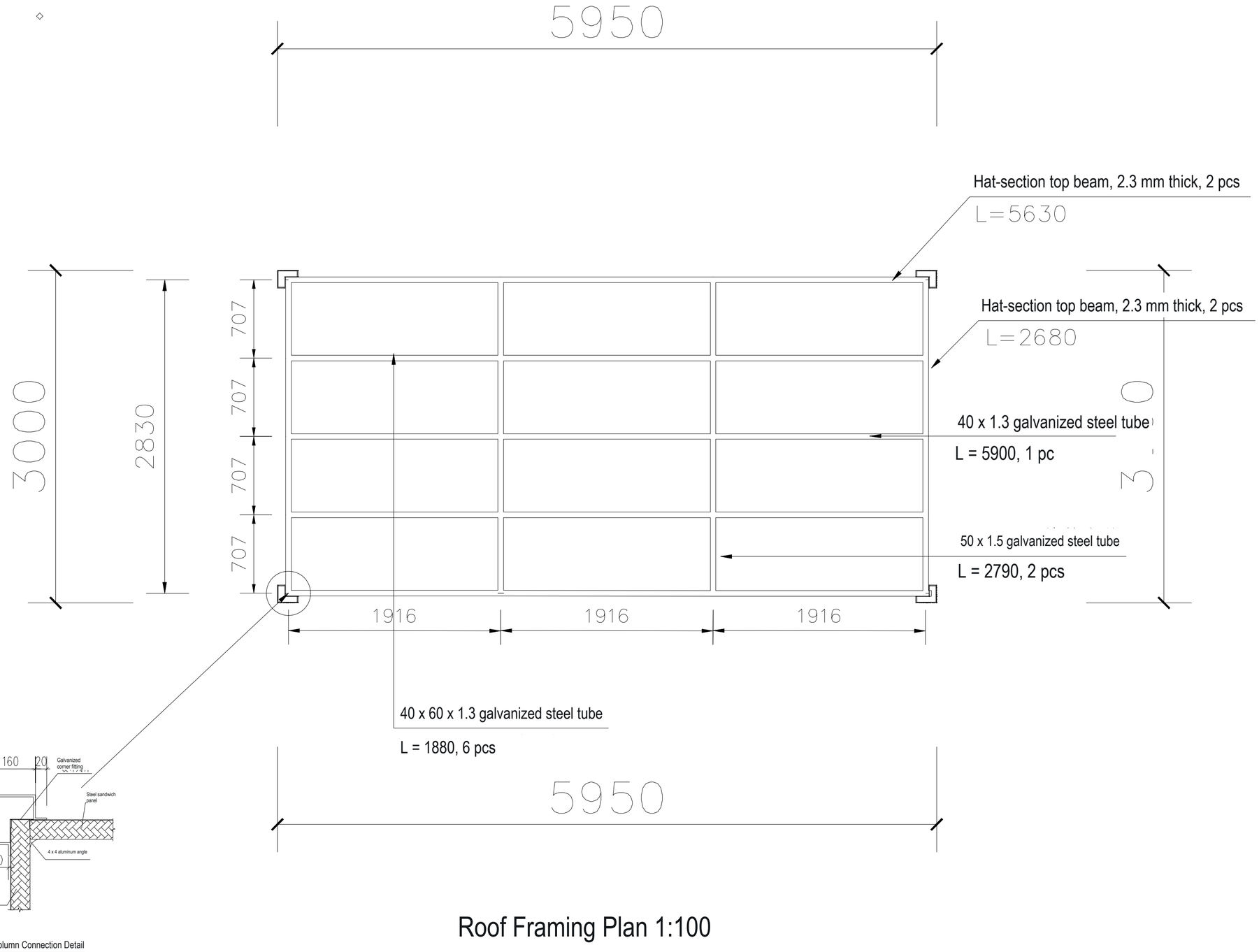

Column Connection Detail

Roof Framing Plan 1:100

QUICK-ASSEMBLY MODULAR HOUSING		REFERENCE ATLAS
Design / Check	Roof Framing Plan	Project:
Review / Approval		Design stage: Scheme
Date / Scale		Sheet 12 of 35

13 :

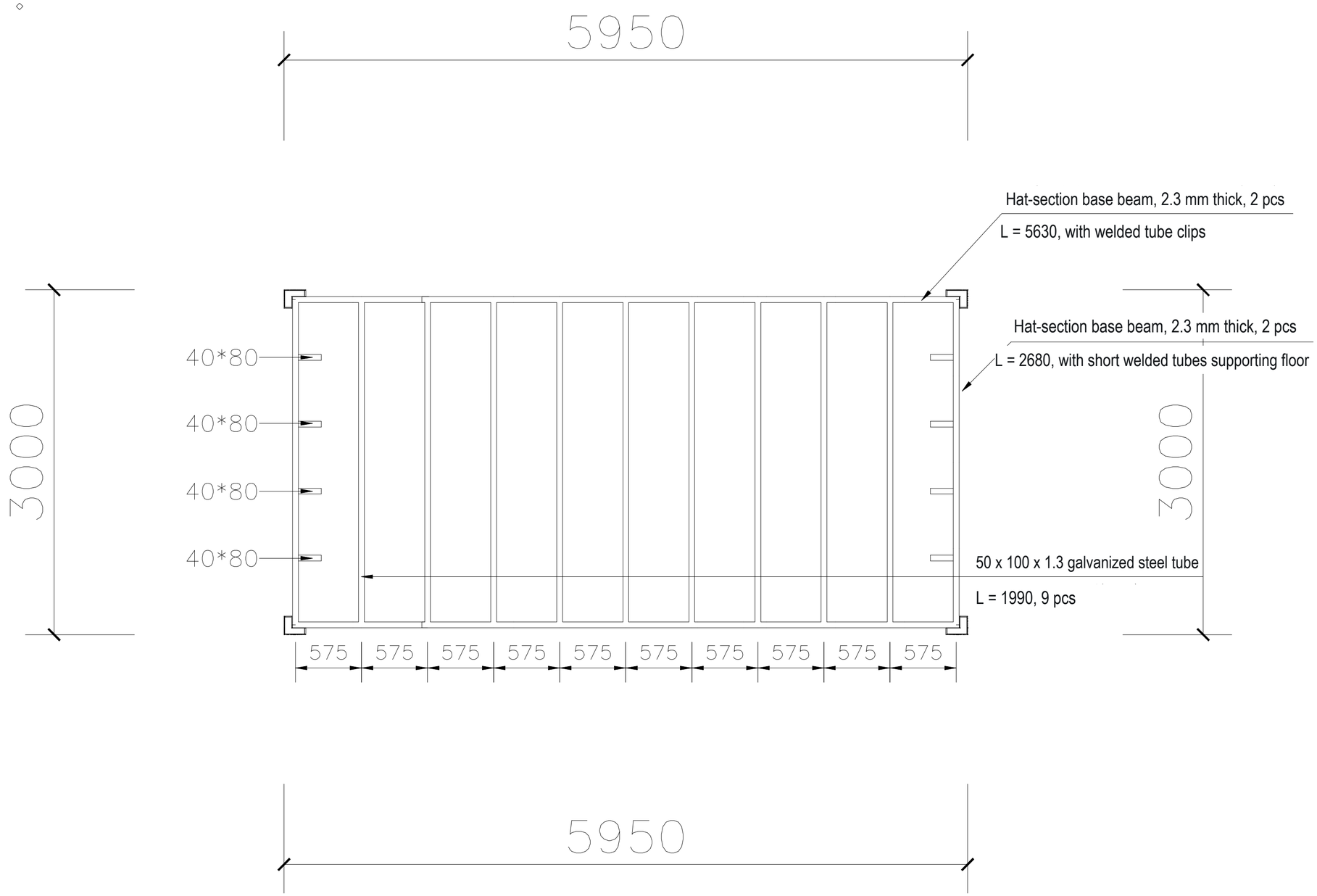

Floor Framing Plan 1:100

QUICK-ASSEMBLY MODULAR HOUSING		REFERENCE ATLAS
Design / Check	Floor Framing Plan	Project:
Review / Approval		Design stage: Scheme
Date / Scale		Sheet 13 of 35

14

Wall Construction Notes (1)

I. Project Overview

This construction applies to enclosure walls of bolted quick-assembly modular units (demountable flat-pack units). Standard external dimensions: 3000 x 5950 x 2800 mm. Wall panels are prefabricated in the factory and bolted together on site without welding. Applications include temporary site buildings, offices, dormitories and ancillary modular accommodation. The wall system combines enclosure, fire protection, thermal and acoustic insulation, waterproofing and decorative finishes.

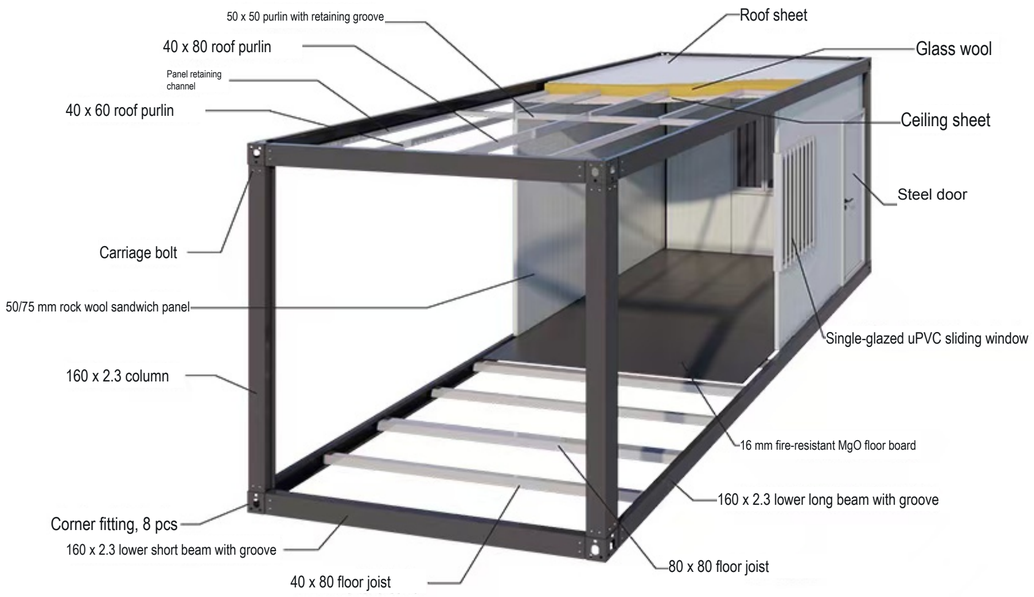

II. Overall Wall Construction System

The wall comprises two systems: a load-bearing steel frame and an insulated sandwich-panel enclosure.

(1) Structural steel wall frame (vertical structural boundaries)

1. Columns: 160 x 2.3 mm hot-dip galvanized C-section steel columns, with wall-panel retaining grooves on all four sides. They carry vertical loads from the top beams and restrain lateral movement of the wall panels. Cast-steel corner fittings at both ends connect to the upper and lower beams using M12 bolts.
2. Continuous upper and lower retaining channels: 50 x 75 mm hot-dip galvanized U-channels at the top and bottom of the wall. They secure the panel ends, close thermal bridges and provide a base for waterproof edge trims.
3. Vertical panel retaining grooves: integral interlocking grooves on the inner faces of the columns receive the tongue-and-groove panel edges. Concealed self-tapping screws secure the panels from outside.
4. Door and window subframes: 40 x 40 mm hot-dip galvanized steel tubes, factory-fitted in wall panels with openings, forming independent load-bearing frames for doors and windows.

QUICK-ASSEMBLY MODULAR HOUSING		REFERENCE ATLAS
Design / Check	Wall Construction Notes (1)	Project:
Review / Approval		Design stage: Scheme
Date / Scale		Sheet 14 of 35

15 :

Wall Construction Notes (2)

(2) Sandwich Wall Panel Section
Standard symmetrical five-layer construction, from exterior to interior. Available wall thicknesses: 50 / 75 / 100 mm.

1. Exterior profiled color-coated steel facing (0.3 / 0.4 / 0.5 mm options)
Polyester- or fluorocarbon-coated hot-dip galvanized steel, with a shallow corrugated profile for weather and corrosion resistance. No exposed exterior screws; tongue-and-groove panel joints are sealed to resist rain, UV exposure and impact.

2. Fire-resistant bonding layer
High-temperature-resistant inorganic adhesive bonds the steel facing and core into a composite panel, preventing delamination during transport and thermal cycling.

3. Thermal-insulating, fire-resistant core
(1) Standard temporary buildings: high-density rock wool (fire class A1), with density options of at least 50 / 80 / 100 kg/m³; thermal conductivity <= 0.040 W/(m·K); sound insulation >= 30 dB.
(2) Cold-climate / premium projects: polyurethane (PU) core (flame-retardant class B1), with thermal conductivity <= 0.024 W/(m·K), for improved thermal insulation.
The core completely fills the panel without voids, preventing air convection and eliminating thermal bridges through the wall.

4. Interior bonding layer
Same as the exterior bonding layer, ensuring overall panel rigidity.

5. Interior color-coated steel facing (0.3 mm)
Flat, plain white steel sheet provides a finished interior without plaster or paint. Concealed chases can be incorporated for electrical wiring and plumbing.

QUICK-ASSEMBLY MODULAR HOUSING		REFERENCE ATLAS
Design / Check	Wall Construction Notes (2)	Project:
Review / Approval		Design stage: Scheme
Date / Scale		Sheet 15 of 35

16 :

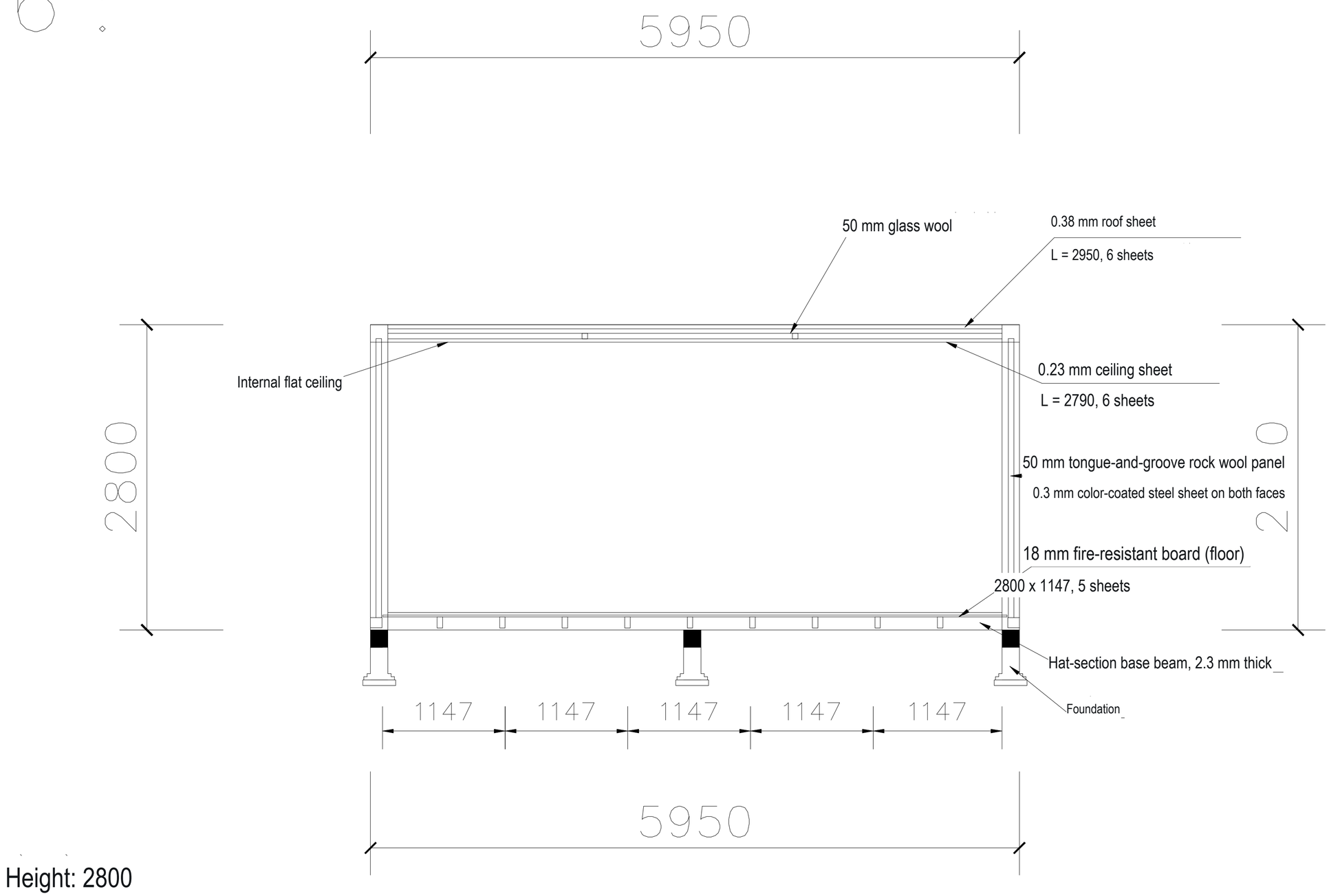

Height: 2800

Section 1:100

QUICK-ASSEMBLY MODULAR HOUSING		REFERENCE ATLAS
Design / Check	Building Section	Project:
Review / Approval		Design stage: Scheme
Date / Scale		Sheet 16 of 35

17 :

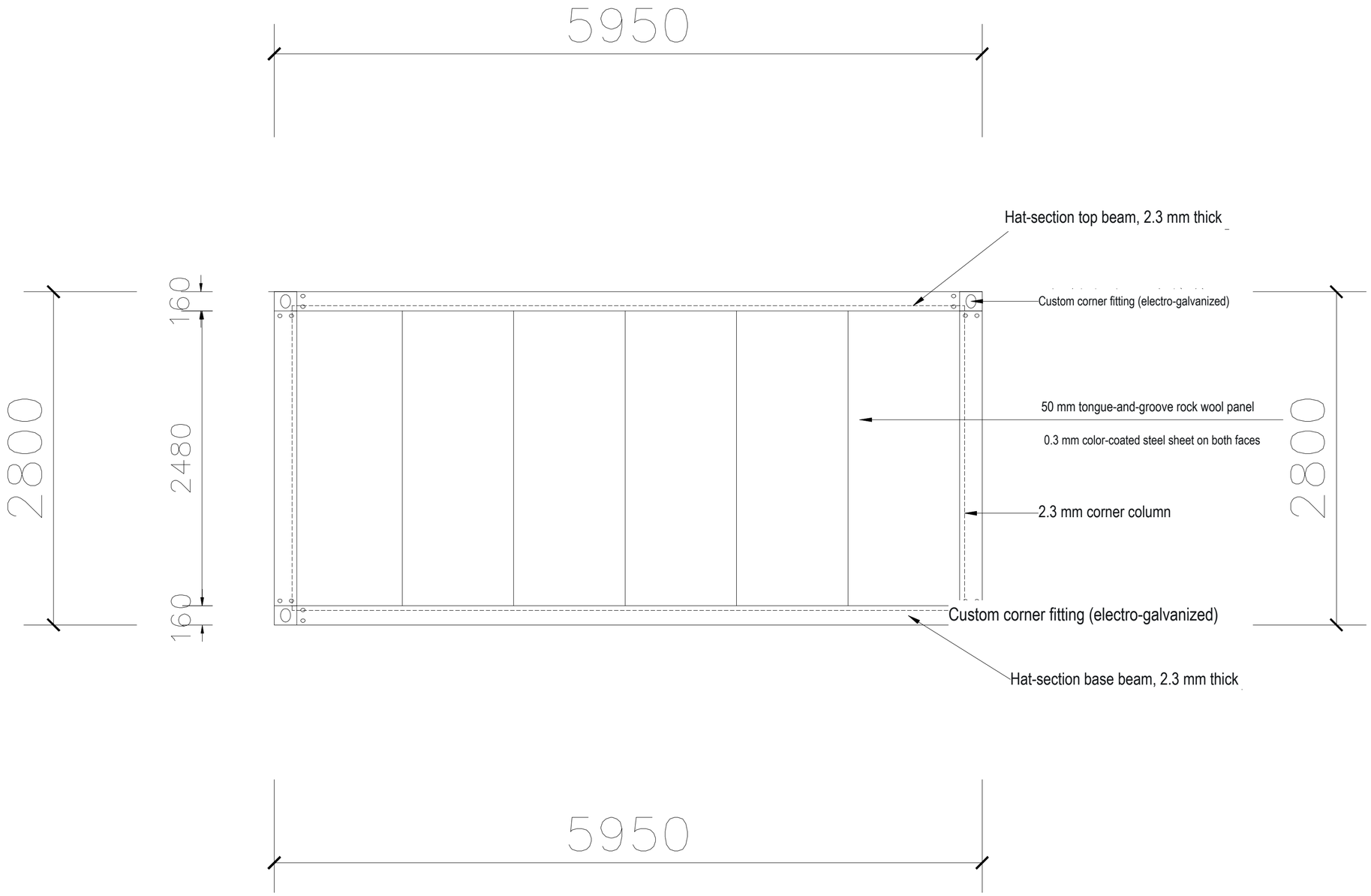

Side Elevation 1:100

QUICK-ASSEMBLY MODULAR HOUSING		REFERENCE ATLAS
Design / Check	Side Elevation	Project:
Review / Approval		Design stage: Scheme
Date / Scale		Sheet 17 of 35

18 :

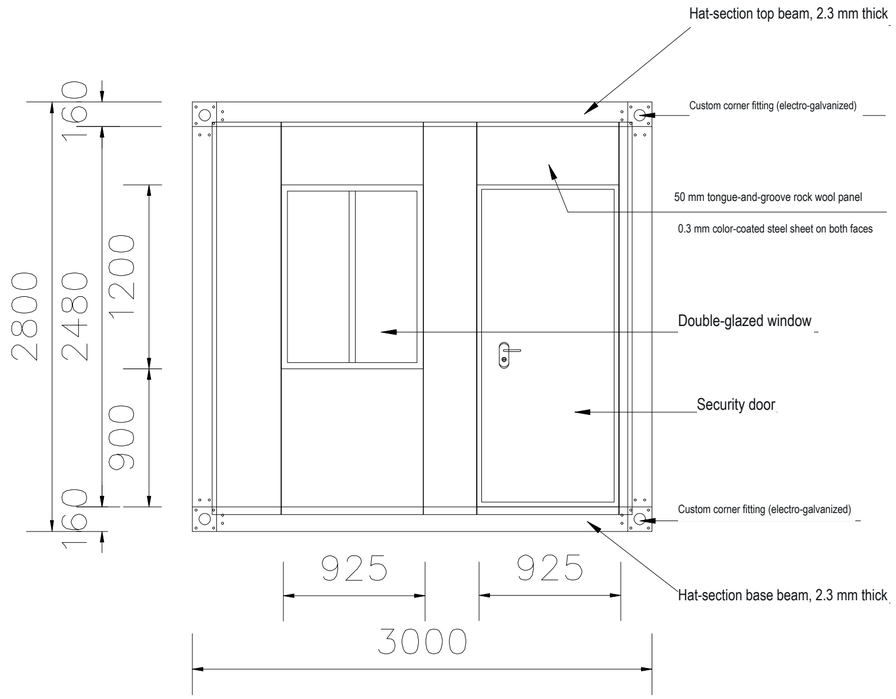

Front Elevation 1:100

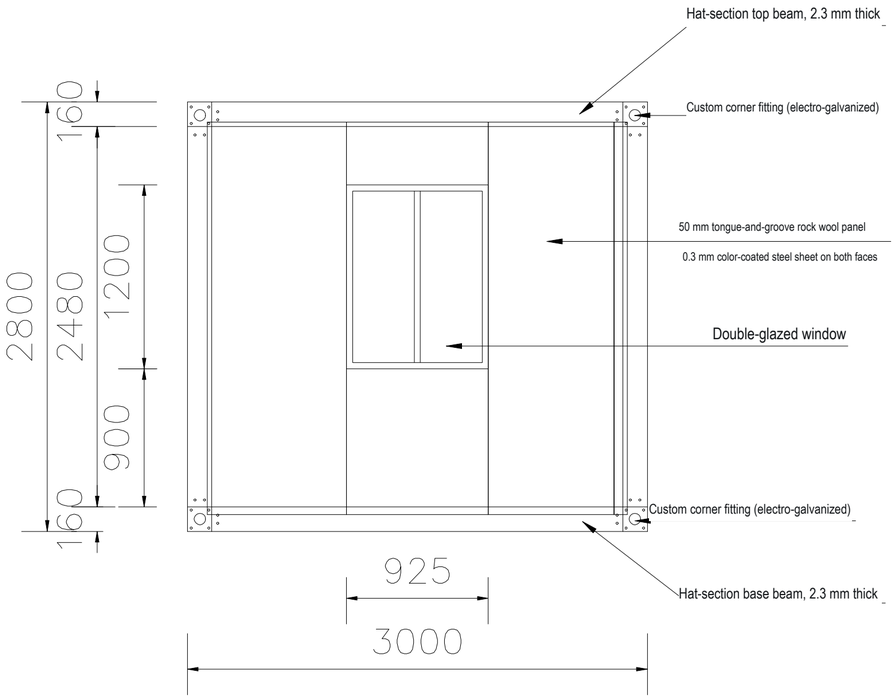

Rear Elevation 1:100

QUICK-ASSEMBLY MODULAR HOUSING		REFERENCE ATLAS
Design / Check	Front and Rear Elevations	Project:
Review / Approval		Design stage: Scheme
Date / Scale		Sheet 18 of 35

19 :

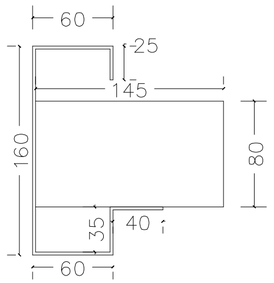

Lower Short Beam Section

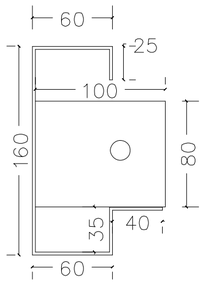

Lower Long Beam Section

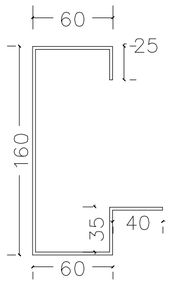

Upper Long/Short Beam Section

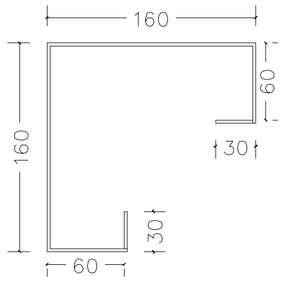

Column Section

QUICK-ASSEMBLY MODULAR HOUSING		REFERENCE ATLAS
Design / Check	Member Cross Sections	Project:
Review / Approval		Design stage: Scheme
Date / Scale		Sheet 19 of 35

20 :

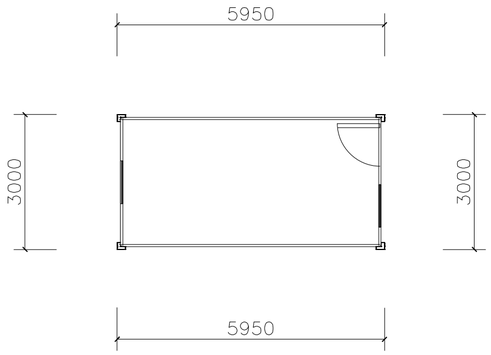

Floor Plan 1:100

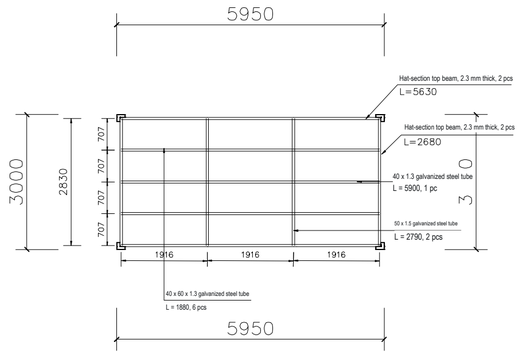

Roof Framing Plan 1:100

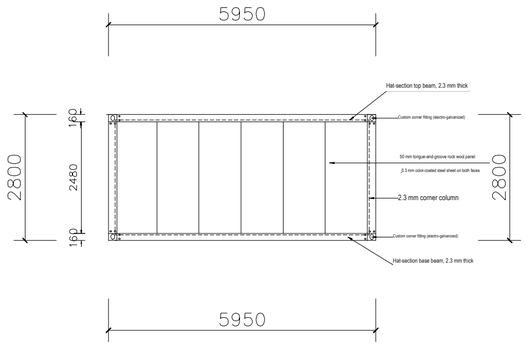

Side Elevation 1:100

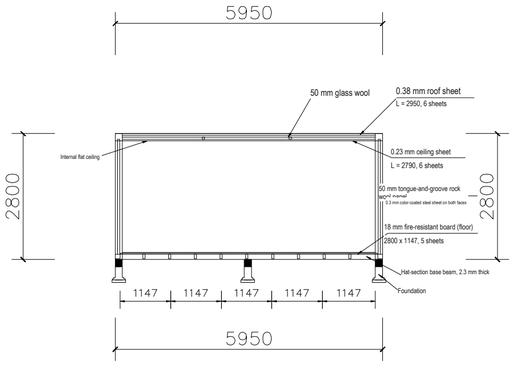

Section 1:100

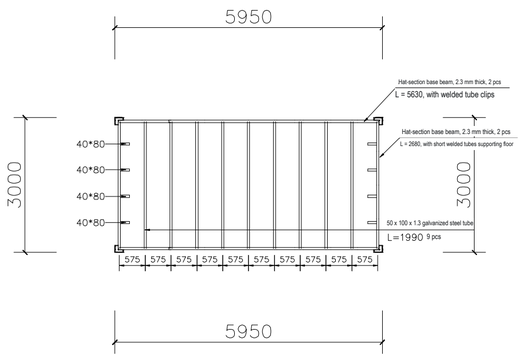

Floor Framing Plan 1:100

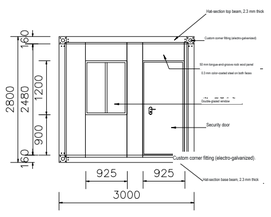

Front Elevation 1:100

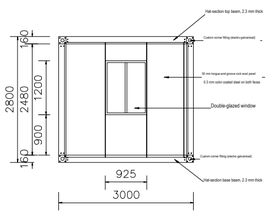

Rear Elevation 1:100

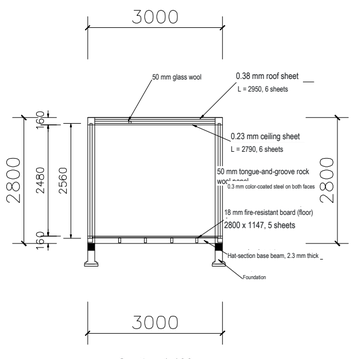

Section 1:100

Height: 2800

Modular Unit Details (2)

QUICK-ASSEMBLY MODULAR HOUSING		REFERENCE ATLAS
Design / Check	Plans and Details (2)	Project:
Review / Approval		Design stage: Scheme
Date / Scale		Sheet 20 of 35

21 :

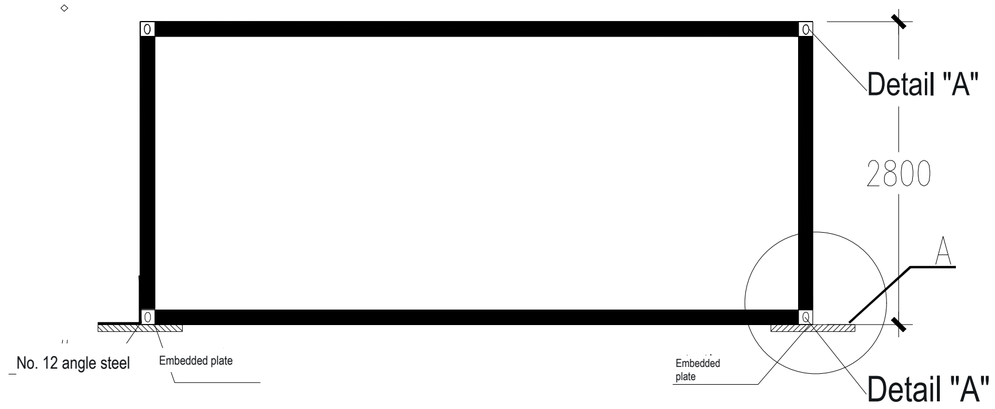

Module transverse section and connection

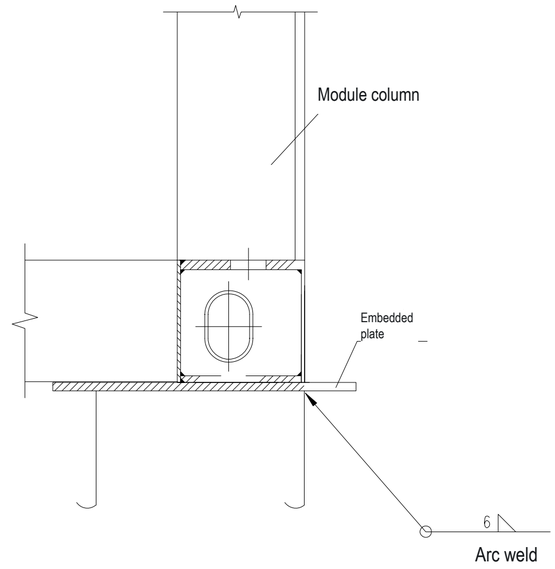

Weld detail A

Notes:
1. Weld all four corner fittings of each module to 6 mm thick embedded plates. Determine plate width according to site conditions. Use continuous welds with h = 6 mm.
2. Tighten all inter-storey connections with high-strength bolts to ensure secure joints.

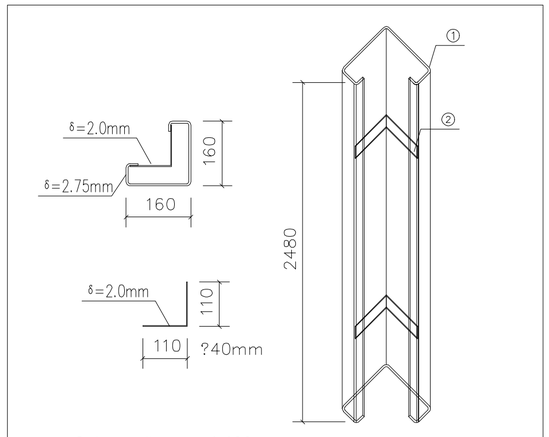

Column diagram 1:100

QUICK-ASSEMBLY MODULAR HOUSING		REFERENCE ATLAS
Design / Check	Embedded Parts and Welds	Project:
Review / Approval		Design stage: Scheme
Date / Scale		Sheet 21 of 35

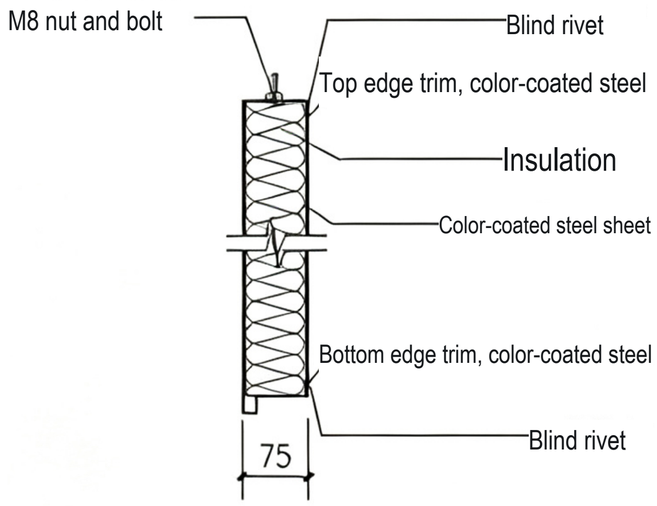

Metal-faced insulated sandwich-panel wall

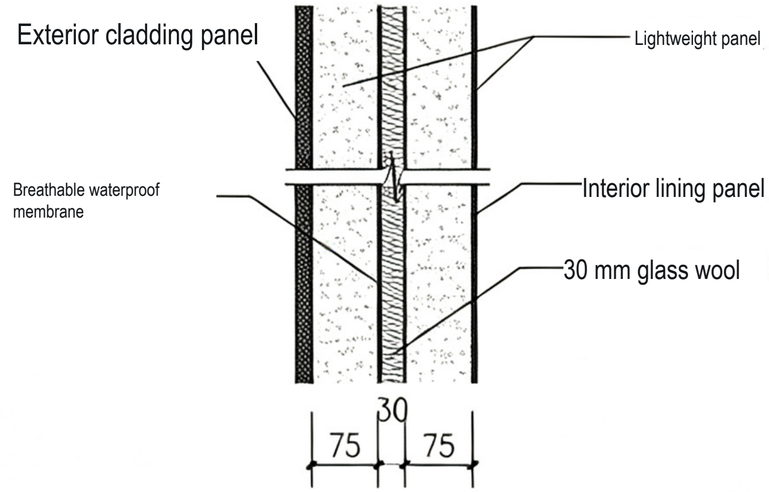

Lightweight composite-panel wall detail

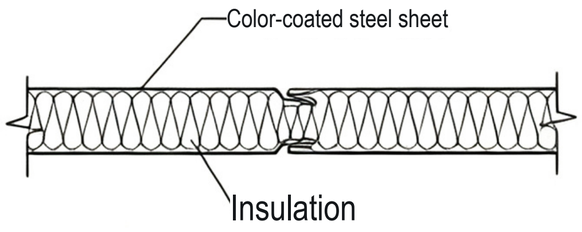

Sandwich-panel interlocking joint

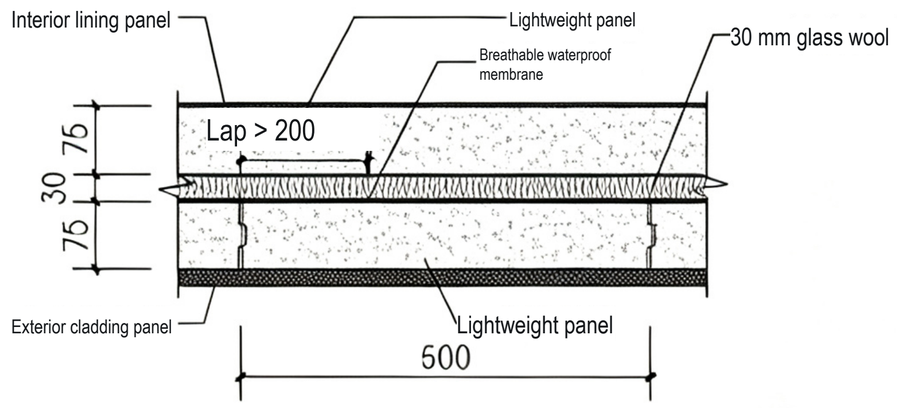

Lightweight composite-panel wall plan

QUICK-ASSEMBLY MODULAR HOUSING		REFERENCE ATLAS
Design / Check	Wall Construction Details	Project:
Review / Approval		Design stage: Scheme
Date / Scale		Sheet 22 of 35

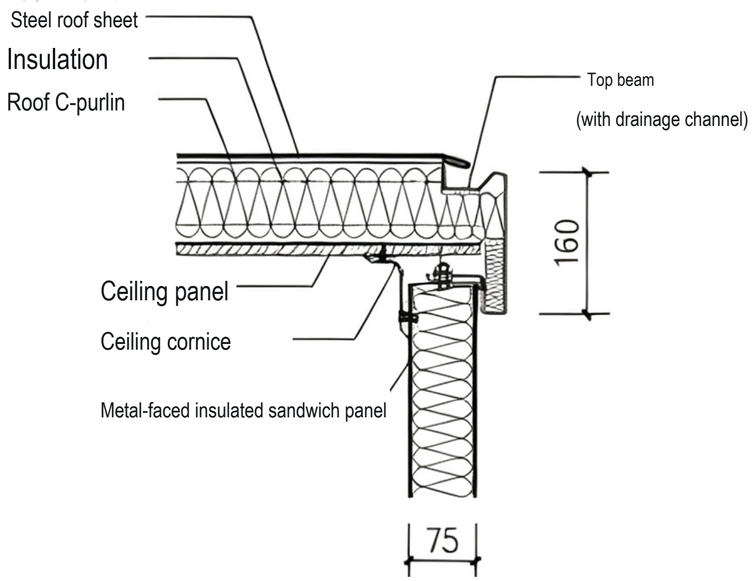

1 Roof corner detail 1

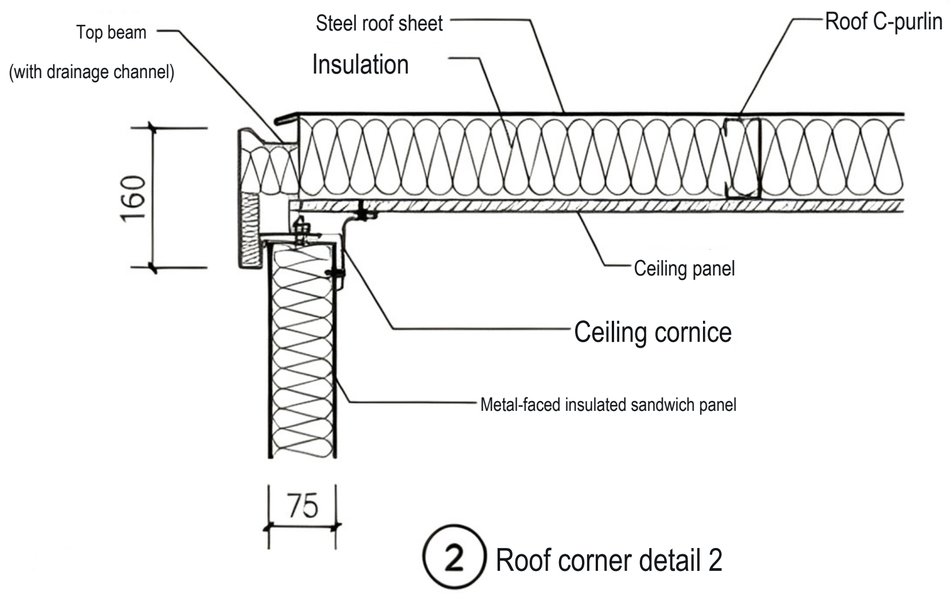

2 Roof corner detail 2

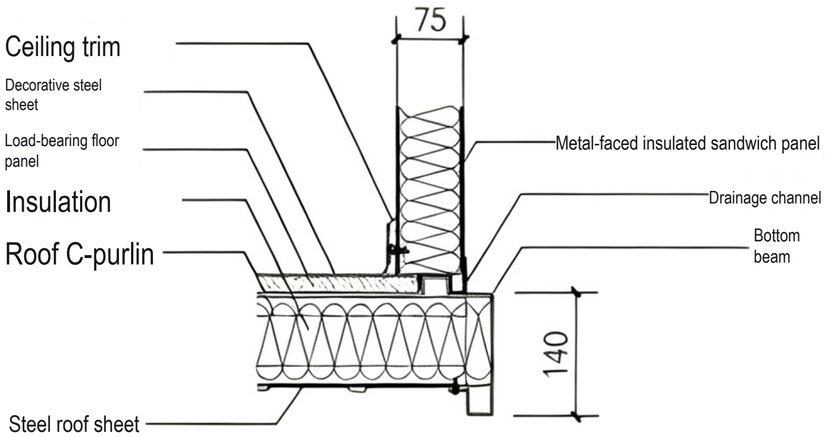

3 Roof corner detail 1

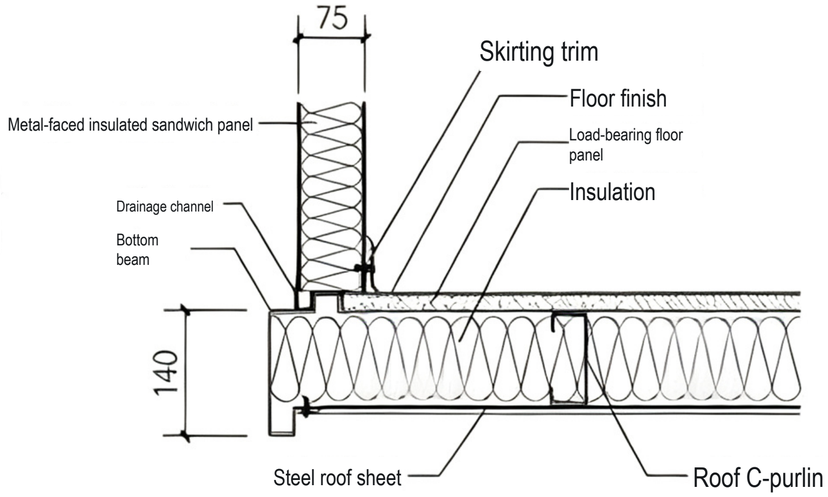

4 Bottom corner detail 2

QUICK-ASSEMBLY MODULAR HOUSING		REFERENCE ATLAS
Design / Check	Roof and Floor Connections	Project:
Review / Approval		Design stage: Scheme
Date / Scale		Sheet 23 of 35

24 :

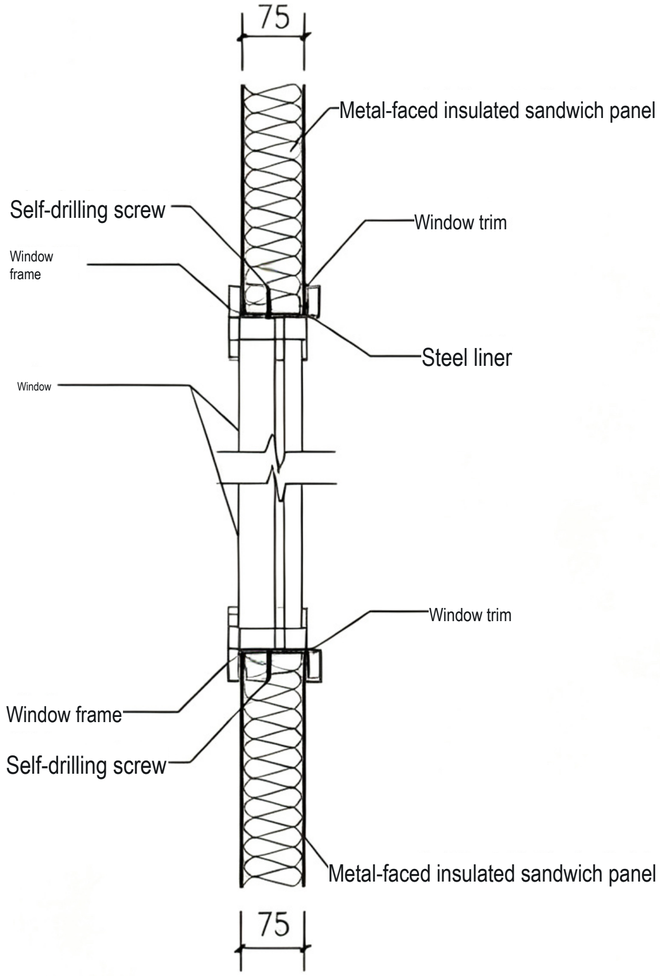

5 Window opening detail

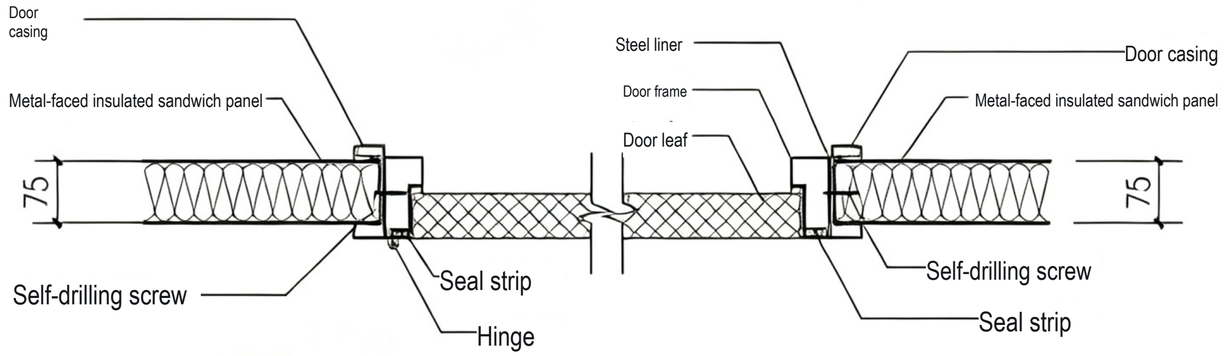

6 Door opening detail

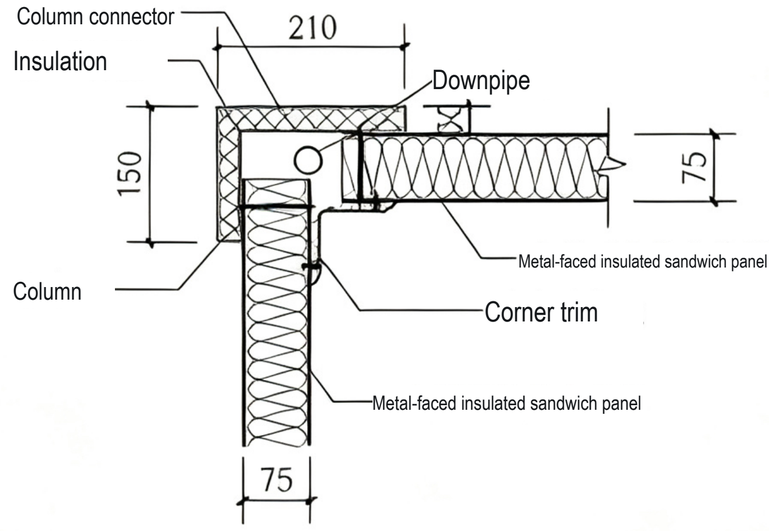

7 Wall corner detail

QUICK-ASSEMBLY MODULAR HOUSING		REFERENCE ATLAS
Design / Check	Window, Door and Corner Details	Project:
Review / Approval		Design stage: Scheme
Date / Scale		Sheet 24 of 35

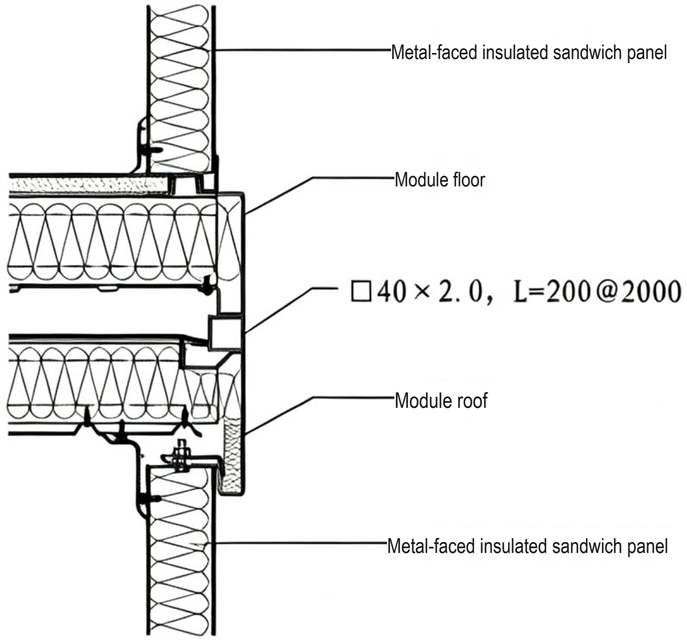

1 Roof-to-floor connection (2 modules)

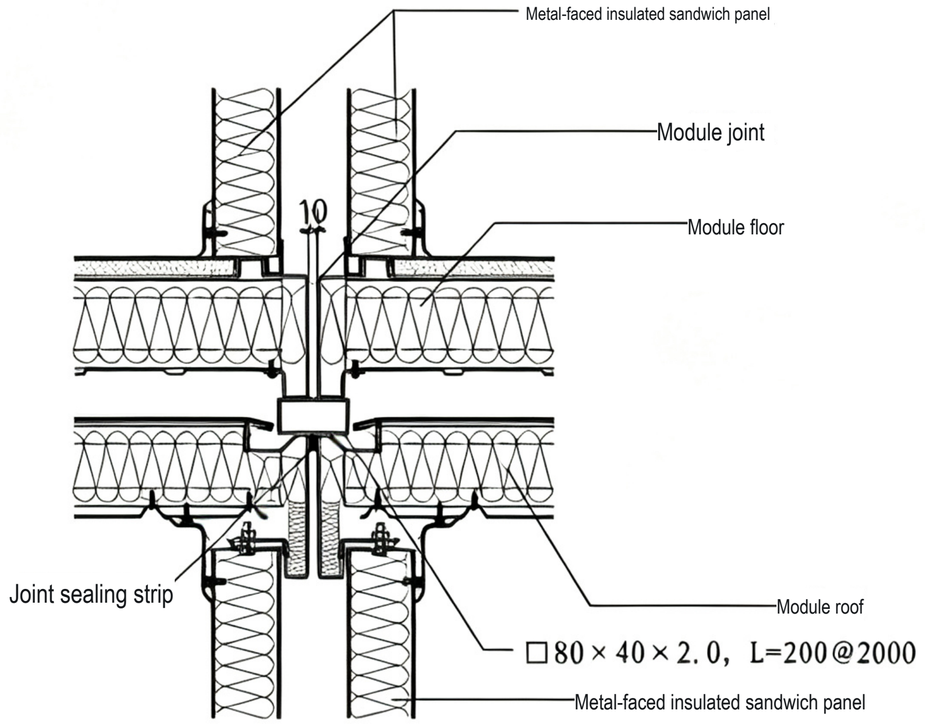

2 Roof-to-floor connection (4 modules)

QUICK-ASSEMBLY MODULAR HOUSING		REFERENCE ATLAS
Design / Check	Panel-to-Column Connections	Project:
Review / Approval		Design stage: Scheme
Date / Scale		Sheet 25 of 35

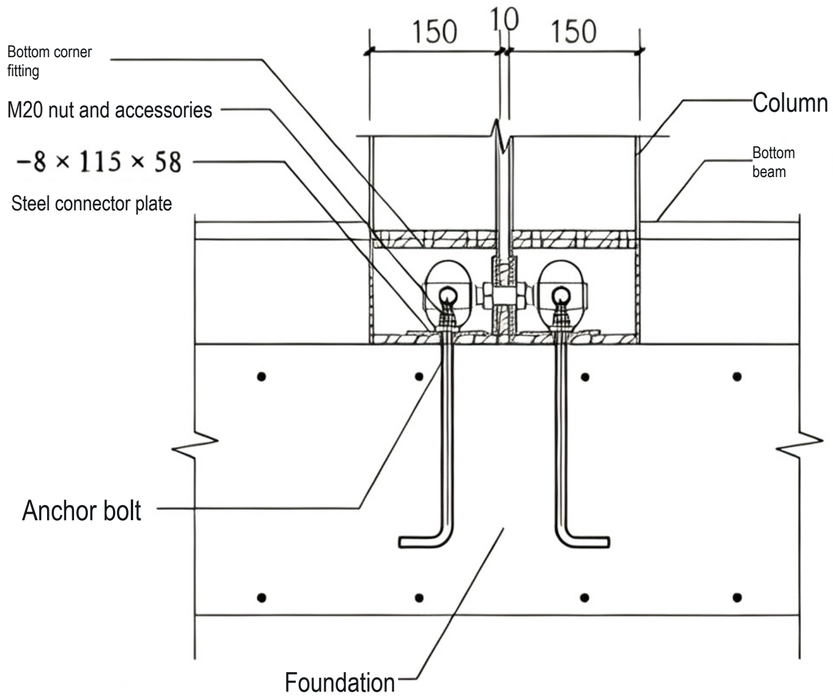

3 Bottom corner-to-foundation connection

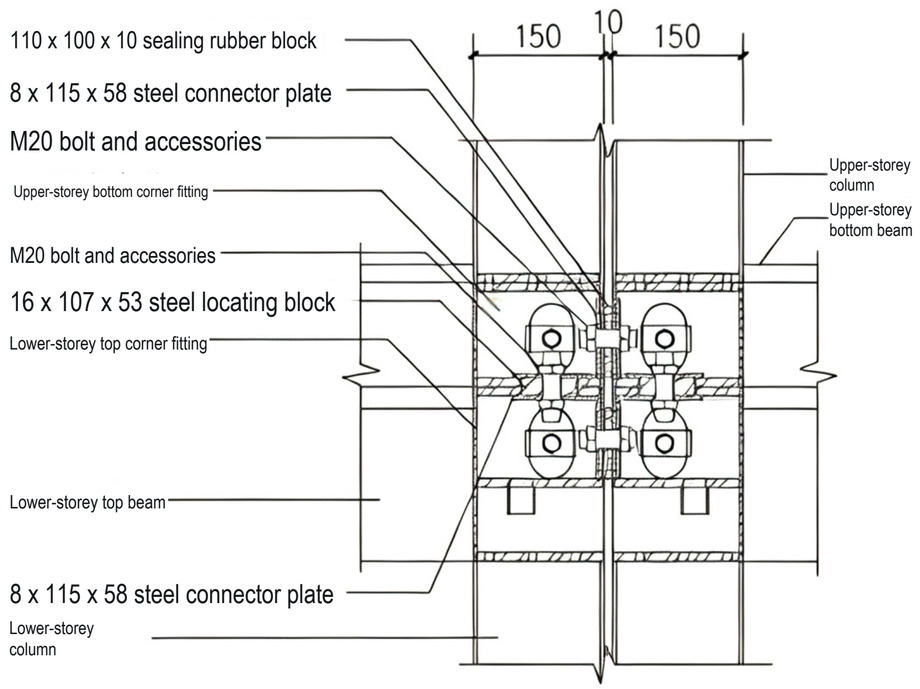

4 Top-to-bottom corner connection

QUICK-ASSEMBLY MODULAR HOUSING		REFERENCE ATLAS
Design / Check	Corner Fitting Connections	Project:
Review / Approval		Design stage: Scheme
Date / Scale		Sheet 26 of 35

27

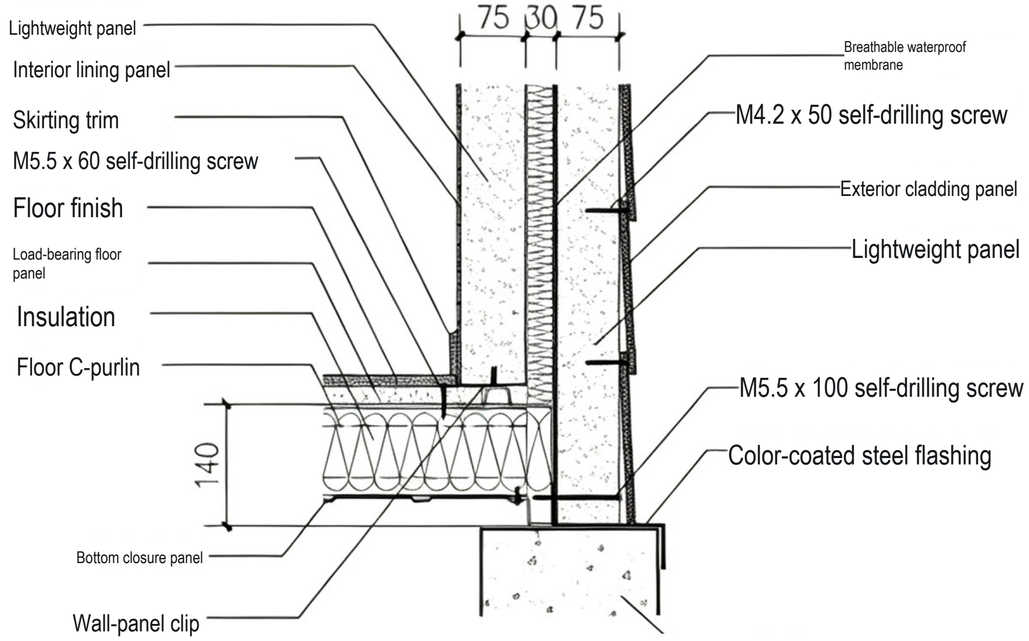

1 Bottom corner

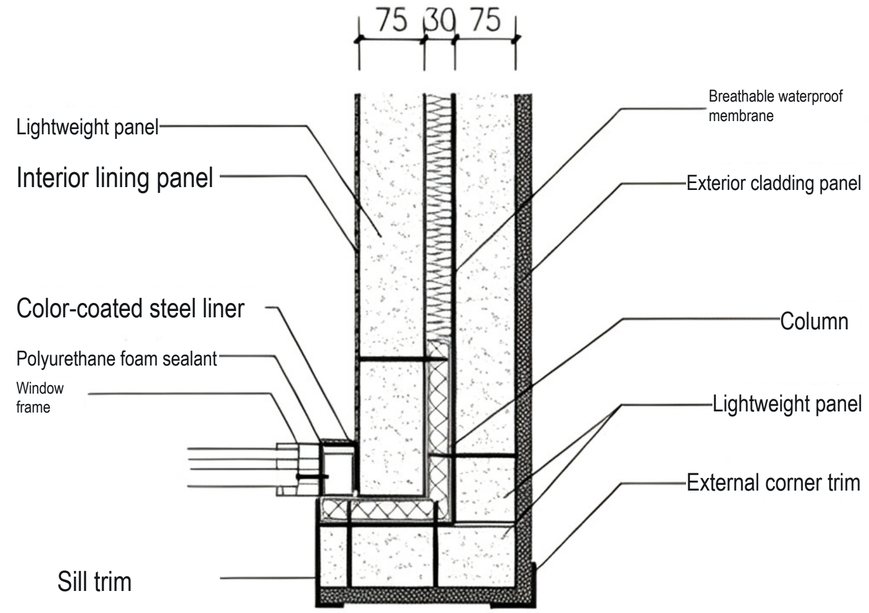

2 Wall corner 1

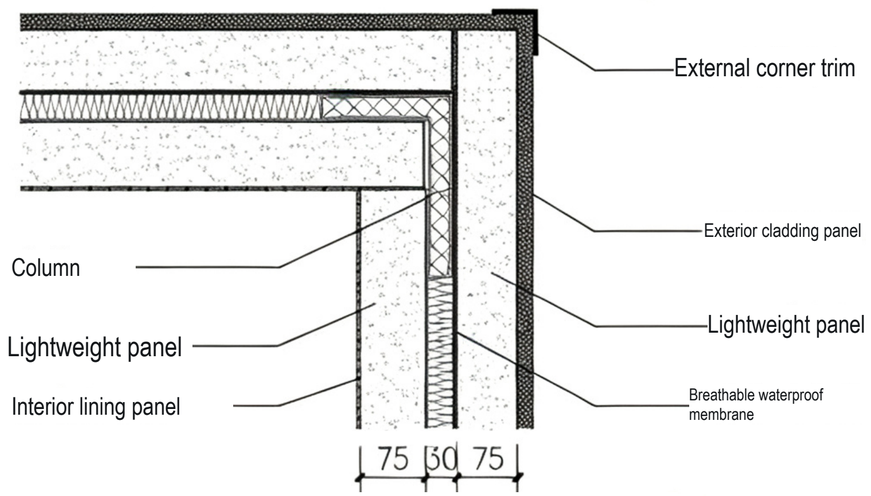

3 Wall corner 2

QUICK-ASSEMBLY MODULAR HOUSING		REFERENCE ATLAS
Design / Check	Wall Corner Details	Project:
Review / Approval		Design stage: Scheme
Date / Scale		Sheet 27 of 35

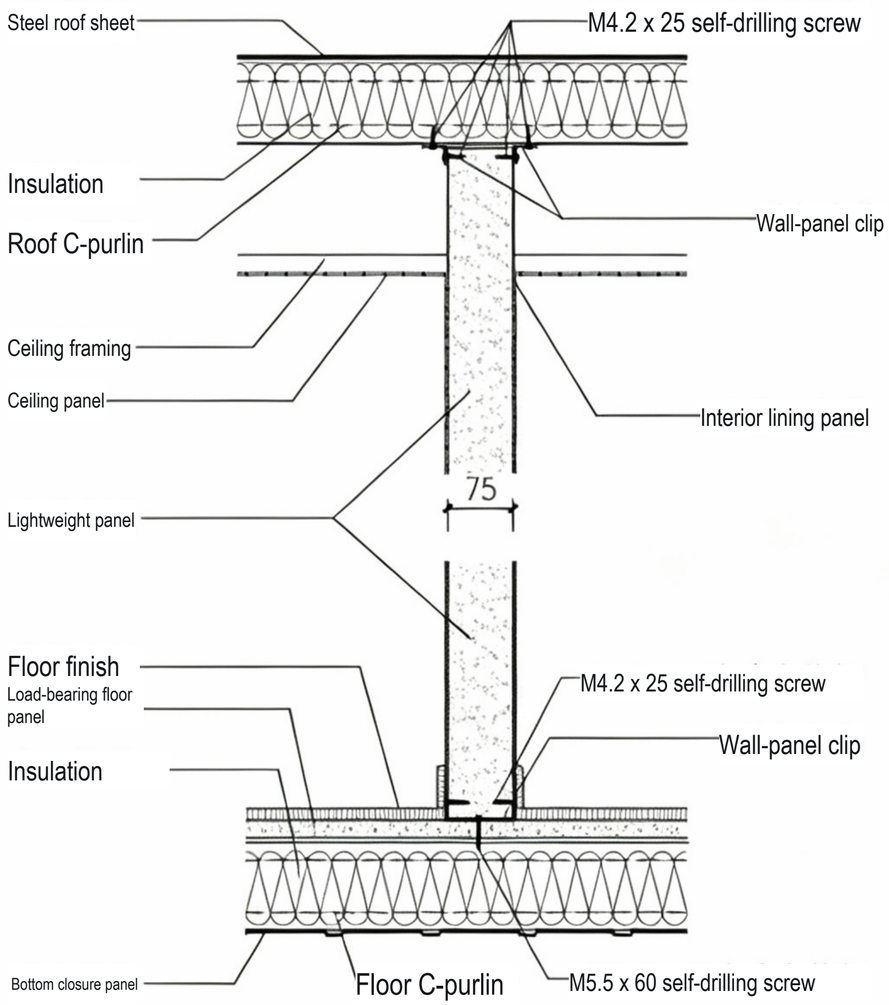

4 Internal partition fixing

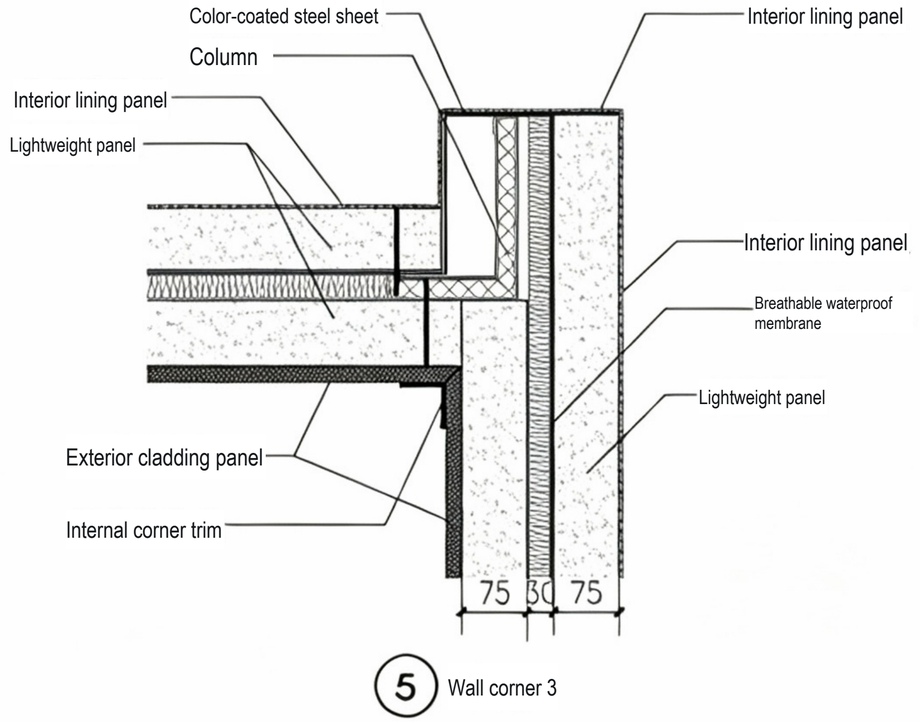

5 Wall corner 3

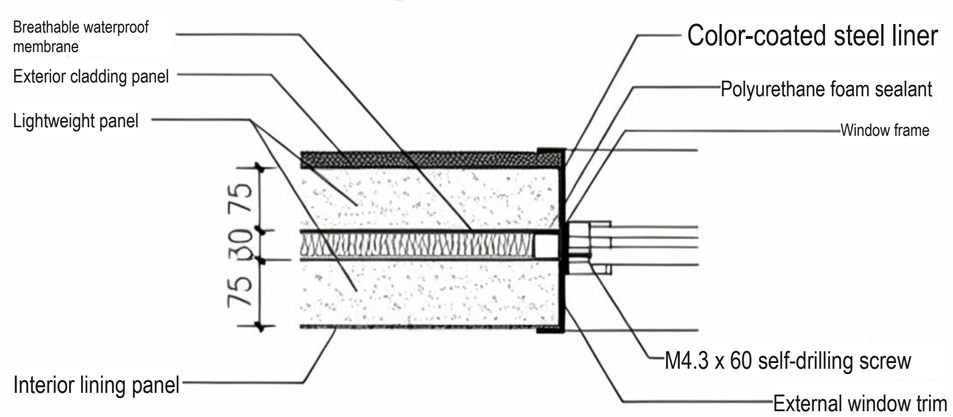

6 Window opening

QUICK-ASSEMBLY MODULAR HOUSING		REFERENCE ATLAS
Design / Check	Partition and Opening Details	Project:
Review / Approval		Design stage: Scheme
Date / Scale		Sheet 28 of 35

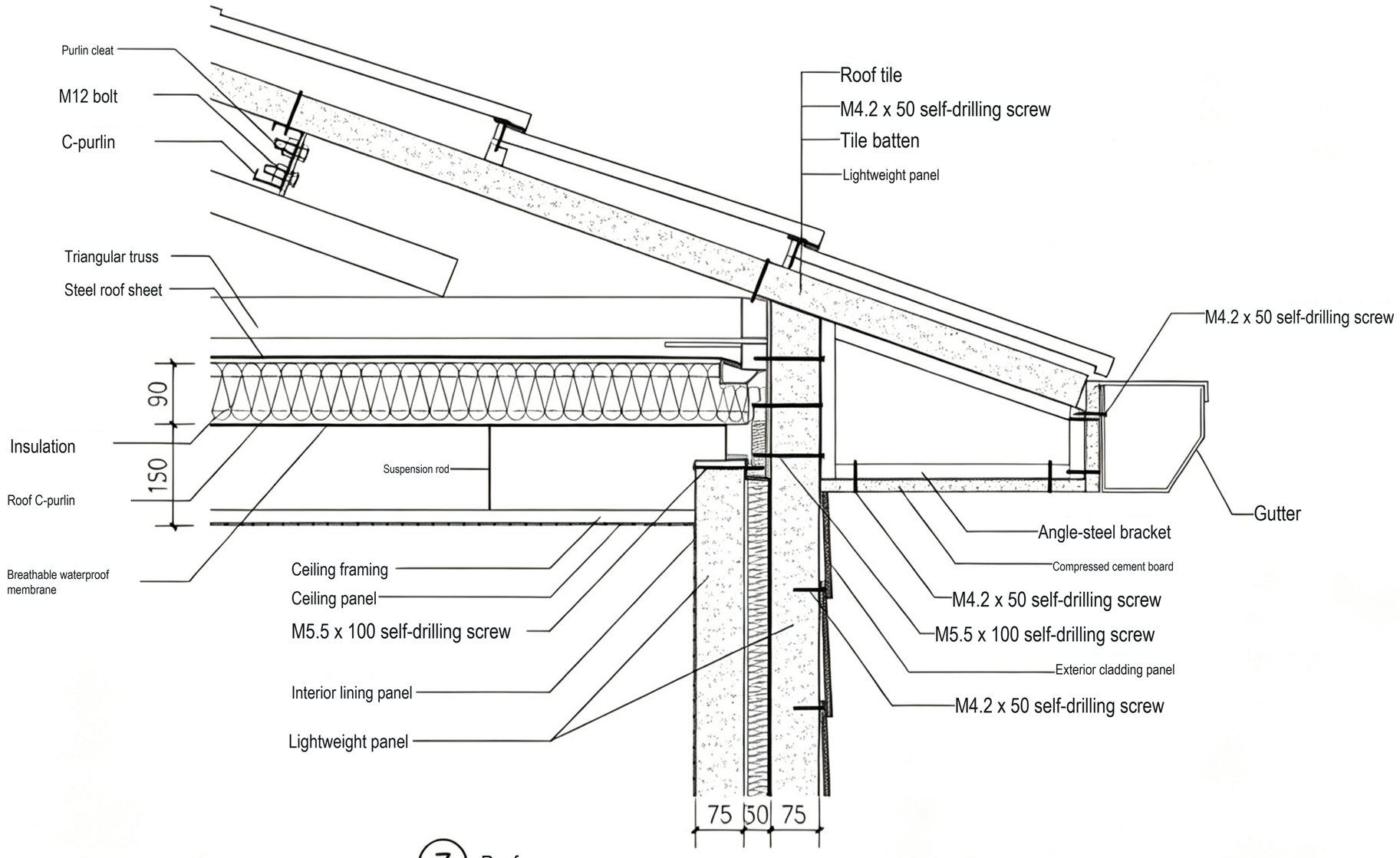

7 Roof corner

QUICK-ASSEMBLY MODULAR HOUSING		REFERENCE ATLAS
Design / Check	Wall and Roof Junction	Project:
Review / Approval		Design stage: Scheme
Date / Scale		Sheet 29 of 35

Modular Cafe - Project Example







Modular cafe conversions: uses and benefits

I. Main applications

1. Street-side pop-up cafes

Temporary destination cafes on the edges of shopping districts, pedestrian streets, night markets and creative quarters, serving drinks and light meals with space to relax and meet.

2. Tourist-area coffee stops

Rest and refreshment points in forest parks, popular attractions, campsites and country parks.

3. Cafes within campuses and business parks

Small cafe and convenience outlets in industrial parks, logistics parks, university districts and factory compounds, serving employees and students.

4. Themed cafes at campsites and RV parks

Outdoor tables and chairs create relaxed coffee spaces for afternoon tea, small team events and photos.

5. Mobile cafes for markets and exhibitions

Quick assembly, dismantling and relocation support short-term trading at major events, markets and exhibitions.

6. Mini neighborhood cafes

Compact outlets in residential retail units and neighborhood squares meet residents' everyday needs.

II. Key benefits

1. Fast construction and an earlier start to trading

The modules are prefabricated, with the main frame, doors, windows and concealed electrical and plumbing provisions completed at the factory. Only assembly is needed on site, allowing the building to be erected in a few days. The much shorter construction period compared with conventional masonry premises enables a prompt opening and helps capture business opportunities.

2. Lower costs and a smaller initial investment

Avoiding concrete pouring, masonry and external rendering reduces material and labor costs compared with conventional shops. It also avoids high business-transfer fees and the pressure of long-term rent, reducing the initial fixed-asset investment and startup risk.

3. Relocatable units and flexible trading locations

The sturdy modules can be lifted and moved as complete units. If foot traffic falls, a commercial district changes or a new location is needed, they can be dismantled, transported and reused without scrapping the building.

4. Flexible styling for a distinctive destination

Paint, wood-grain finishes, illuminated signs, full-height glazing and terraces can be customized. Interiors can be divided into service and seating areas as needed. Industrial, Instagram-inspired and camping styles create photogenic venues that attract visitors through online promotion.

QUICK-ASSEMBLY MODULAR HOUSING		REFERENCE ATLAS
Design / Check	Cafe Project Example	Project:
Review / Approval		Design stage: Scheme
Date / Scale		Sheet 30 of 35

Modular Buildings for Southeast Asia - Project Example









In Southeast Asia, project development demands speed, efficiency and cost control. Quick-assembly flat-pack modules are increasingly used for mining camps, construction site offices, temporary offices, worker accommodation and supporting commercial facilities.
Compared with conventional prefabricated buildings, they use shipping-container space more efficiently and are faster to install. A small crew can assemble them without complex site work, substantially shortening the delivery schedule. They also offer stable, durable performance in Southeast Asia's hot, rainy and humid conditions.
The modular design supports flexible combinations and customized offices, dormitories, meeting rooms, canteens and toilets. For international construction projects, overseas camps and temporary facilities, it saves both time and overall cost.
Made in China and supplied to countries across Southeast Asia, these buildings make temporary accommodation a more efficient and dependable space solution.

Core advantages in the Southeast Asian market
Given the region's hot, wet climate, limited infrastructure, labor conditions, industries and policy environment, prefabricated modular buildings offer significant advantages over masonry and conventional temporary buildings.
I. Fast construction for demanding schedules
1. Factory prefabrication leaves only assembly on site. A building can be completed in a few days, reducing construction time by more than 70% compared with masonry.
2. Construction sites, mines, plantations, temporary camps and post-disaster accommodation often need rapid occupancy; these modules enable fast delivery.
3. Most work takes place in factories in China, limiting prolonged outdoor work during the rainy season and reducing weather disruption during assembly.
II. Lower overall costs
1. Simple foundations avoid heavy reinforced-concrete bases and substantially reduce foundation costs.
2. Skilled construction workers are scarce in Southeast Asia and daily wages are rising. Assembly requires very little site labor, reducing labor costs.
3. Standardized mass production and bulk purchasing further reduce unit prices, keeping overall construction costs below masonry buildings.

QUICK-ASSEMBLY MODULAR HOUSING		REFERENCE ATLAS
Design / Check	Southeast Asia Project Example	Project:
Review / Approval		Design stage: Scheme
Date / Scale		Sheet 31 of 35

Modular Guesthouses - Project Example











Key advantages of modular guesthouses

I. Short construction periods and an earlier return on investment

1. Modules are prefabricated at the factory; site work is limited to lifting, assembly and utility connections. An entire guesthouse can be erected in a matter of weeks, far less than the six months or more needed for masonry construction.

2. Without lengthy civil works, construction can take place in the low season and operations can begin quickly to capture peak-season tourism revenue.

II. Lower construction costs and less initial investment pressure

1. Using far less rebar, cement, brick and tile reduces overall construction costs compared with conventional masonry guesthouses.

2. Simple foundations require no deep excavation. Construction can proceed on level, hard-surfaced ground, substantially reducing foundation costs.

III. Relocatable buildings for flexible sites

1. As temporary modular buildings, they do not require approval for permanent house construction and are easier to locate on leisure sites such as scenic areas, countryside, riverbanks and woodland.

2. The modules can be moved when the business relocates. Expiry of a land lease does not require the building to be scrapped; the asset can be reused.

IV. Thermal and acoustic insulation for comfortable stays

Modern modules use rock-wool or polyurethane insulated sandwich panels with thermally broken aluminum doors and windows.

1. Insulation keeps heat out in summer and retains warmth in winter, reducing air-conditioning energy use and operating costs.

2. Adding acoustic panels effectively reduces outdoor noise to provide quiet guest accommodation.

V. Flexible, attractive designs for destination appeal

1. Single-storey, two-storey and staggered arrangements can incorporate terraces, full-height windows and viewing balconies to create Instagram-inspired, rural or camping-style guesthouses.

2. Wood-grain finishes, exterior paint and imitation stone can make the exterior closely resemble a conventional house. Photogenic designs support online promotion and visitor attraction.

VI. Energy efficiency, environmental benefits and easy maintenance

1. Standardized factory production generates very little construction waste, keeps sites clean and meets environmental controls in scenic areas.

2. The strong steel frame and established waterproofing and corrosion-protection methods simplify routine maintenance compared with conventional buildings. Refurbishment and alterations are quick and convenient.

Modular Retail Street - Project Example





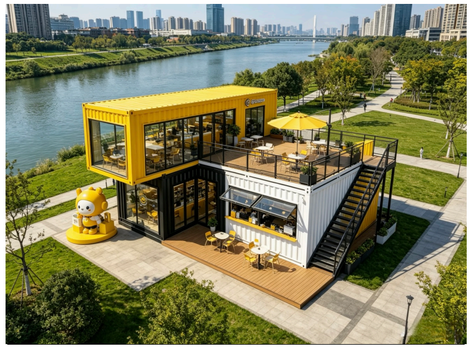



Key advantages of modular destination retail streets
Quick-assembly flat-pack modules use prefabricated structures suited to retail streets that require rapid opening, attractive design, limited fixed-asset investment and flexible operation. Compared with conventional masonry shops and basic market shelters, their advantages fall into six main areas:
I. Very fast construction to capture peak trading seasons
1. Most structural elements, electrical and plumbing services, doors and windows are prefabricated. Site assembly uses bolts, without welding or civil construction.
2. A single module can be assembled in a few hours. An entire retail street takes only 15-40 days, one-third of a conventional project's construction period or less, enabling opening in time for holidays, night markets and the summer shopping season.
3. Lengthy civil-work approvals and fit-out delays are avoided. Vacant sites, unused parking lots and spare corners of business parks can be developed quickly, shortening preparation and reducing losses from idle capital.
II. Lower overall construction costs and a faster payback
1. Construction costs are approximately 40% lower than for conventional masonry retail streets, reducing unit costs and the pressure of initial fixed-asset investment.
2. Flat-pack transport saves 75% in freight costs compared with fully welded container units, providing a significant advantage when transporting buildings to another location.
3. These relocatable prefabricated buildings avoid large foundation investments and have lower land-rental costs, making them suitable for retail-street projects on short-term leased sites.
Lounge bars, exhibitions and other popular commercial formats.

Forest Modular Cafe - Project Example









Key advantages and business benefits of forest modular cafes
I. Adaptable to woodland sites, with fewer barriers to development
1. Mountains, forests and country parks often restrict permanent construction. Temporary modular buildings avoid major foundation excavation, removal of native trees and vegetation, and extensive ground paving. They protect the forest environment and make environmental and land approvals much easier than for conventional timber or masonry buildings.
2. Simple gravel or boardwalk foundations avoid deep excavation and damage to tree roots, making the buildings well suited to forest clearings, spaces beneath trees, campsites and areas beside woodland trails.
3. Unused woodland, forestry sites, country green spaces and spare areas within attractions can be rented for short periods, with low land costs and flexible lease terms.
II. Fast construction to capture peak visitor seasons
1. Electrical and plumbing installations, windows, doors and timber facade finishes are prefabricated. Only assembly is needed on site, allowing a complete two-storey cafe to open in around two weeks.
2. Brief site work produces little noise or dust and avoids prolonged disruption to the forest landscape. Rapid opening helps capture spring and summer camping, autumn outings and holiday visitors, shortening the payback period.
3. Lengthy interior work is unnecessary, allowing trading to begin after installation and avoiding the extended civil works and painting required for conventional buildings.
III. A forest-inspired appearance with photogenic appeal
1. Natural timber facades and large panoramic windows can be customized. The staggered two-storey form shown brings forest views indoors through transparent glazing, creating a strong connection between inside and outside.
2. Modular construction accommodates upper-storey terraces and outdoor decks. Parasols, camping chairs, stone paths and greenery create a calming forest setting and natural photo opportunities. Short videos and Xiaohongshu posts can attract visitors and reduce promotional costs.
3. Flexible forms include staggered upper floors, open terraces and large view windows. Coffee-themed features and planting distinguish the cafe from ordinary shops and create a recognizable forest destination.

QUICK-ASSEMBLY MODULAR HOUSING		REFERENCE ATLAS
Design / Check	Forest Cafe Project Example	Project:
Review / Approval		Design stage: Scheme
Date / Scale		Sheet 34 of 35

Pink Two-Storey Modular Shop - Project Example



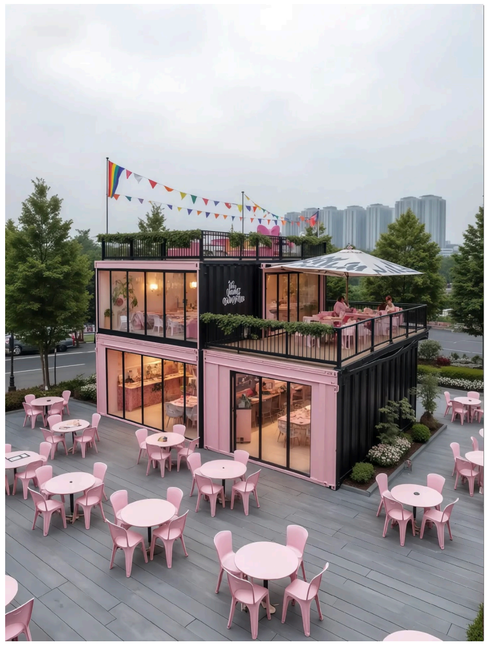

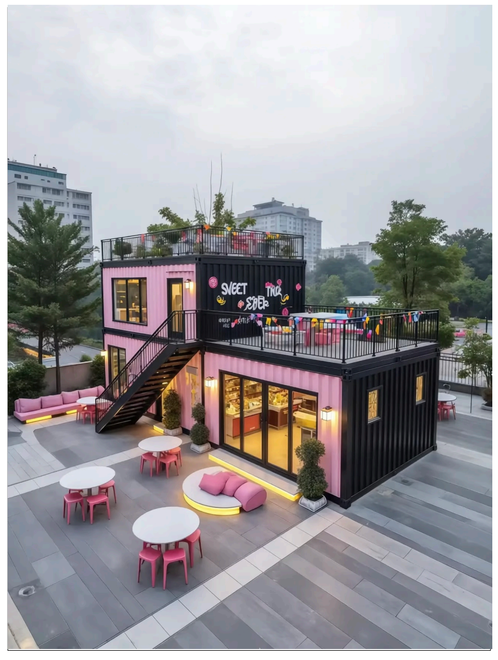

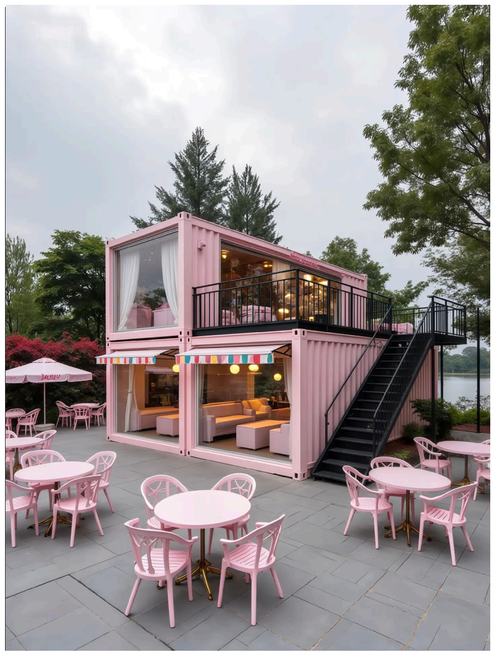

Pink two-storey modular shop: key advantages and benefits
(Popular destination-cafe design)
I. Construction cost and schedule advantages
1. Fast construction and an earlier return on investment
Factory-prefabricated modules only need lifting and assembly on site. A complete two-storey shop can be finished in 3-7 days, compared with at least several months for conventional masonry construction and fit-out. A shorter preparation period enables earlier opening and earnings.
2. Lower costs and a smaller initial investment
Simple hard-surfaced ground replaces complex foundations, saving substantial materials and labor. For an equivalent floor area, costs are much lower than for reinforced-concrete shops, making the system suitable for startups, temporary destination stores and lakeside tourism businesses with limited fixed-asset investment.
3. Phased investment
A ground-floor shop can open first and a second storey can be added later. The entire building need not be funded and completed at once, reducing financial pressure.
II. Flexible modular layouts for retail operation
1. Freely combined and divided spaces
In the two-storey arrangement shown, the ground floor accommodates customers and a service counter; the upper floor provides private rooms with views and leisure or photo areas. Modules, partitions, full-height windows, balconies and terraces can be added or removed as needed. The layout suits bubble-tea shops, cafes, dessert shops, creative retail and campsite outlets.
2. Adaptable facades with strong visual appeal
The modules can be painted in pastel pink, cream white and other fashionable colors, with panoramic glazing, rainbow awnings, balcony railings and outdoor terraces. Their photogenic appearance attracts visitors, particularly at lakesides, parks and scenic sites. Short videos and Xiaohongshu posts provide natural publicity.
3. Generous scope for indoor and outdoor expansion
A large outdoor area can accommodate dining and photo seating, such as the pink tables and chairs shown. Upper-floor viewing balconies and lakeside rooms can command higher prices and increase average spending per customer.

QUICK-ASSEMBLY MODULAR HOUSING		REFERENCE ATLAS
Design / Check	Pink Two-Storey Retail Example	Project:
Review / Approval		Design stage: Scheme
Date / Scale		Sheet 35 of 35